REV	ZONE	ECN	DESCRIPTION OF REVISION	CK APPD / DATE	ENG APPD / DATE
PRO			PROTOTYPE RELEASE	5/29/98	5/29/98
EVT			EVTA RELEASE	6/20/98	6/20/98
EVT			EVTB RELEASE	7/20/98	7/20/98
DVT			DVT RELEASE	9/4/98	9/4/98
PRD			PVT RELEASE	10/9/98	10/9/98
A		67751	PRODUCTION RELEASE	11/98	11/98
B		68642	PRODUCTION UPDATE 1	12/98	12/98
C		69405	PRODUCTION UPDATE 1.1	1/99	1/99

TABLE OF CONTENTS

Section	Page	Description
Contents	1.	Cover Page
	2.	Technical Block Diagram
CPU	3.	CPU Interposer
	4.	CPU Core Voltage Regulator
Clocks	5.	System & PCI Clocks
	6.	SDRAM and Buffer Clocks
	7.	Zero Delay Clock Buffer
	8.	Other Clocks
Core Logic	9.	Memory Controller / PCI Host Bridge (Motorola Grackle)
DRAM	10.	SDRAM Control & PCI Arbitor (Apple GC-II)
	11.	SDRAM & ROM Address Buffers
	12.	SDRAM Data Latches
	13.	SDRAM DIMMs 0 & 1
	14.	SDRAM DIMMs 2 & 3
ROM	15.	Flash & Mask Boot ROM
Config	16.	Power, Fan & Scan Connectors
	17.	FPB/IrDA (Reset/NMI & IrDA) Connector
PCI	18.	66Mhz 32bit PCI Slot 1
	19.	PCI 66Mhz 32bit to 33Mhz 64bit Bridge (DEC 21154)
	20.	64bit 33Mhz PCI Slot 2
	21.	64bit 33Mhz PCI Slot 3
	22.	64bit 33Mhz PCI Slot 4
Legacy I/O	23.	I/O Controller ASIC (Apple Paddington)
	24.	ADB Controller and RTC (Apple Cuda)
	25.	Serial Modem Connector
	26.	ATA(3) / ATAPI Connector and NVRAM
Ethernet	27.	10/100 Ethernet Interface
	28.	Ethernet Transceiver and Connector
Ultra ATA	29.	Ultra ATA Controller (CMD 0646U2)
	30.	Ultra ATA Connector
USB	31.	USB Controller (CMD 0670)
	32.	USB Ports 1 and 2
	33.	USB Soft Power-On
FireWire	34.	FireWire Link Layer (TI Lynx)
	35.	FDB Interface and Bus Holders
Audio	36.	Audio Codec (Apple Burgundy)
	37.	DVD Analog and Digital Inputs
	38.	CD Analog Audio inputs
	39.	Microphone & Rear Headphone Jacks
	40.	Mono Amp & Speaker Connector
Other	41.	Caps, Plated holes & Reference Info
	42.	Reference Locators 1
	43.	Reference Locators 2
	44.	Revision History

PART NUMBER	QTY	DESCRIPTION	ASSOCIATED REFERENCE DESIGNATORS
820-1049-A	1	PCB, YOSEMITE MLB	PCB1

BOM OPTION SPECIAL CHARACTERS LEGEND

(PRECEEDS THE BOM OPTION NAME)

"$" = DEFAULT BOM OPTION

"=" = COPY TO COOKED BOM BUT DO NOT COOK

Cover Page

DIMENSIONS ARE EXPRESSED IN MILLIMETERS

X.X± ____

X.XX± ____

X.XXX± ____

ANGLES± ____

DO NOT SCALE DRAWINGS

THIRD ANGLE PROJECTION

METRIC

DRAFTER		DESIGN CK	
ENG APPD		MFG APPD	
QA APPD		DESIGNER	
RELEASE		SCALE NONE	

MATERIAL/FINISH NOTED AS APPLICABLE

SIZE D

Apple Computer, Inc

NOTICE OF PROPRIETARY PROPERTY

THE INFORMATION CONTAINED HEREIN IS THE PROPRIETARY PROPERTY OF APPLE COMPUTER, INC. THE POSSESSOR AGREES TO THE FOLLOWING

(I) TO MAINTAIN THE DOCUMENT IN CONFIDENCE

(II) NOT TO REPRODUCE OR COPY IT

(III) NOT TO REVEAL OR PUBLISH IT IN WHOLE OR PART

TITLE

SCHEM, MLB, PMG3

DRAWING NUMBER 051-0777 REV. C

SHT 1 OF 44

ECS CAD GENERATED

APPLE CONFIDENTIAL

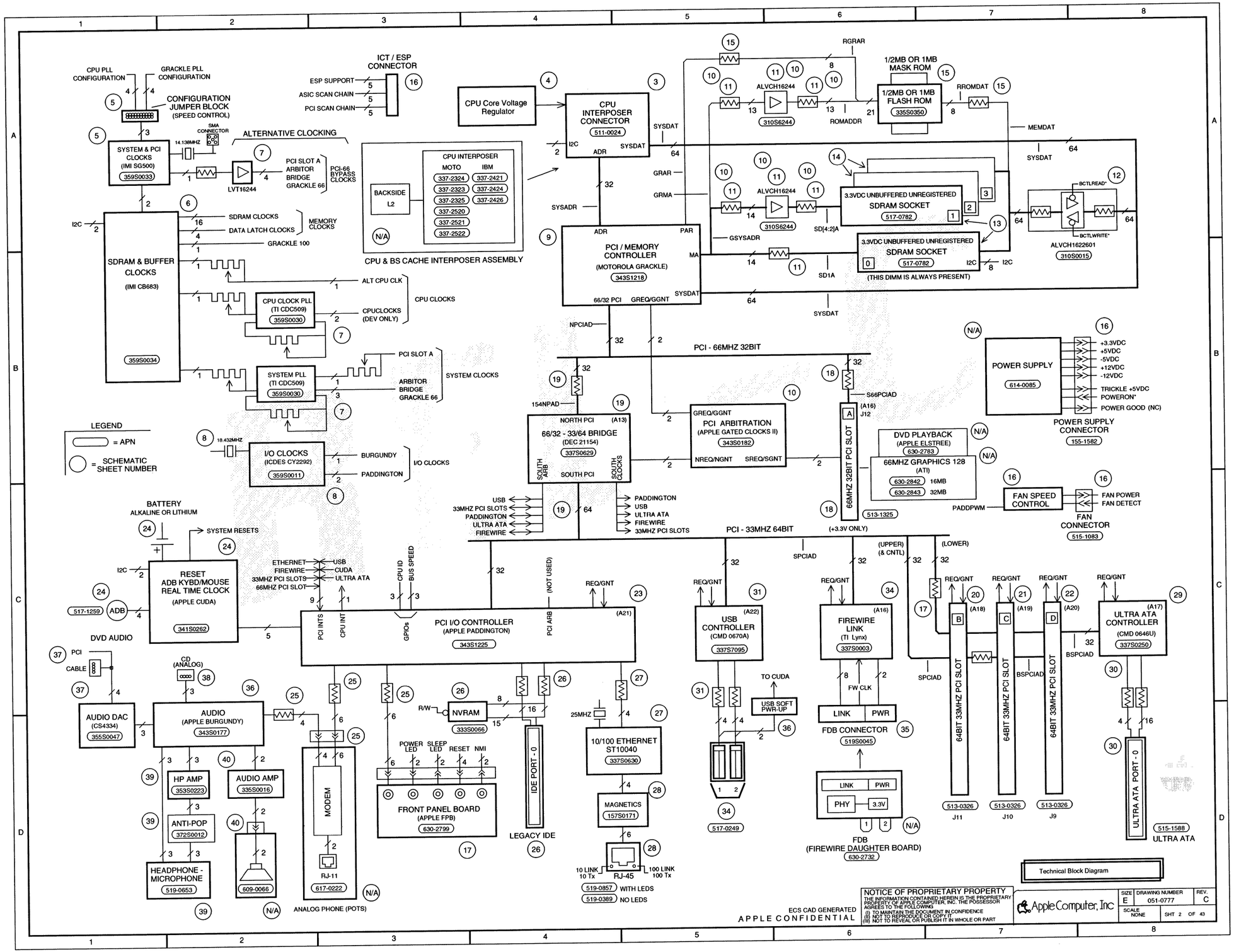
CPU PLL CONFIGURATION
GRACKLE PLL CONFIGURATION
CONFIGURATION JUMPER BLOCK (SPEED CONTROL)
SYSTEM & PCI CLOCKS (IMI SG500) 359S0033
14.138MHZ
SMA CONNECTOR
ALTERNATIVE CLOCKING
LVT16244
PCI SLOT A
ARBITOR
BRIDGE
GRACKLE 66
PCI-66 BYPASS CLOCKS
SDRAM CLOCKS
DATA LATCH CLOCKS
GRACKLE 100
MEMORY CLOCKS
SDRAM & BUFFER CLOCKS (IMI CB683) 359S0034
ALT CPU CLK
CPU CLOCK PLL (TI CDC509) 359S0030
CPUCLOCKS (DEV ONLY)
CPU CLOCKS
PCI SLOT A
SYSTEM PLL (TI CDC509) 359S0030
ARBITOR
BRIDGE
GRACKLE 66
SYSTEM CLOCKS
18.432MHZ
I/O CLOCKS (ICDES CY2292) 359S0011
BURGUNDY
PADDINGTON
I/O CLOCKS
LEGEND
= APN
= SCHEMATIC SHEET NUMBER
ICT / ESP CONNECTOR
ESP SUPPORT
ASIC SCAN CHAIN
PCI SCAN CHAIN
CPU Core Voltage Regulator
CPU INTERPOSER CONNECTOR 511-0024
I2C
ADR
SYSDAT
SYSADR
BACKSIDE L2
N/A
CPU INTERPOSER
MOTO
IBM
337-2324
337-2323
337-2325
337-2520
337-2521
337-2522
337-2421
337-2424
337-2426
CPU & BS CACHE INTERPOSER ASSEMBLY
PCI / MEMORY CONTROLLER (MOTOROLA GRACKLE) 343S1218
PAR
MA
66/32 PCI
GREQ/GGNT
GRAR
GRMA
GSYSADR
NPCIAD
RGRAR
ALVCH16244
310S6244
ROMADDR
1/2MB OR 1MB MASK ROM
1/2MB OR 1MB FLASH ROM 335S0350
RROMDAT
MEMDAT
3.3VDC UNBUFFERED UNREGISTERED SDRAM SOCKET 517-0782
SD[4:2]A
SD1A
(THIS DIMM IS always PRESENT)
BCTLREAD*
BCTLWRITE*
ALVCH1622601 310S0015
PCI - 66MHZ 32BIT
154NPAD
NORTH PCI
(A13)
66/32 - 33/64 BRIDGE (DEC 21154) 337S0629
SOUTH ARB
SOUTH PCI
SOUTH CLOCKS
USB
33MHZ PCI SLOTS
PADDINGTON
ULTRA ATA
FIREWIRE
PCI ARBITRATION (APPLE GATED CLOCKS II) 343S0182
NREQ/NGNT
SREQ/SGNT
S66PCIAD
(A16)
J12
66MHZ 32BIT PCI SLOT
DVD PLAYBACK (APPLE ELSTREE) 630-2783
66MHZ GRAPHICS 128 (ATI)
630-2842 16MB
630-2843 32MB
513-1325
POWER SUPPLY 614-0085
+3.3VDC
+5VDC
-5VDC
+12VDC
-12VDC
TRICKLE +5VDC
POWERON*
POWER GOOD (NC)
POWER SUPPLY CONNECTOR 155-1582
FAN SPEED CONTROL
PADDPWM
FAN POWER
FAN DETECT
FAN CONNECTOR 515-1083
PCI - 33MHZ 64BIT
(+3.3V ONLY)
SPCIAD
(UPPER) (& CNTL)
(LOWER)
BATTERY
ALKALINE OR LITHIUM
SYSTEM RESETS
RESET ADB KYBD/MOUSE REAL TIME CLOCK (APPLE CUDA) 341S0262
517-1259
ADB
DVD AUDIO
ETHERNET
FIREWIRE
33MHZ PCI SLOTS
66MHZ PCI SLOT
USB
CUDA
ULTRA ATA
CPU ID
BUS SPEED
PCI INTS
CPU INT
GPIOs
PCI I/O CONTROLLER (APPLE PADDINGTON) 343S1225
PCI ARB
(NOT USED)
REQ/GNT
(A21)
USB CONTROLLER (CMD 0670A) 337S7095
(A22)
TO CUDA
USB SOFT PWR-UP
517-0249
FIREWIRE LINK (TI Lynx) 337S0003
(A16)
FW CLK
LINK
PWR
FDB CONNECTOR 519S0045
PHY
3.3V
FDB (FIREWIRE DAUGHTER BOARD) 630-2732
64BIT 33MHZ PCI SLOT
(A18)
(A19)
(A20)
513-0326
J11
J10
J9
BSPCIAD
ULTRA ATA CONTROLLER (CMD 0646U) 337S0250
(A17)
ULTRA ATA PORT - 0
515-1588
ULTRA ATA
PCI
CABLE
CD (ANALOG)
AUDIO DAC (CS4334) 355S0047
AUDIO (APPLE BURGUNDY) 343S0177
HP AMP 353S0223
AUDIO AMP 335S0016
ANTI-POP 372S0012
HEADPHONE - MICROPHONE 519-0653
609-0066
MODEM
RJ-11
617-0222
ANALOG PHONE (POTS)
R/W
NVRAM 333S0066
POWER LED
SLEEP LED
RESET
NMI
FRONT PANEL BOARD (APPLE FPB) 630-2799
IDE PORT - 0
LEGACY IDE
25MHZ
10/100 ETHERNET ST10040 337S0630
MAGNETICS 157S0171
10 LINK 10 Tx
100 LINK 100 Tx
RJ-45
519-0857 WITH LEDS
519-0389 NO LEDS
Technical Block Diagram
ECS CAD GENERATED
APPLE CONFIDENTIAL
NOTICE OF PROPRIETARY PROPERTY
THE INFORMATION CONTAINED HEREIN IS THE PROPRIETARY PROPERTY OF APPLE COMPUTER, INC. THE POSSESSOR AGREES TO THE FOLLOWING
(I) TO MAINTAIN THE DOCUMENT IN CONFIDENCE
(II) NOT TO REPRODUCE OR COPY IT
(III) NOT TO REVEAL OR PUBLISH IT IN WHOLE OR PART
Apple Computer, Inc
SIZE E
DRAWING NUMBER 051-0777
REV. C
SCALE NONE
SHT 2 OF 43

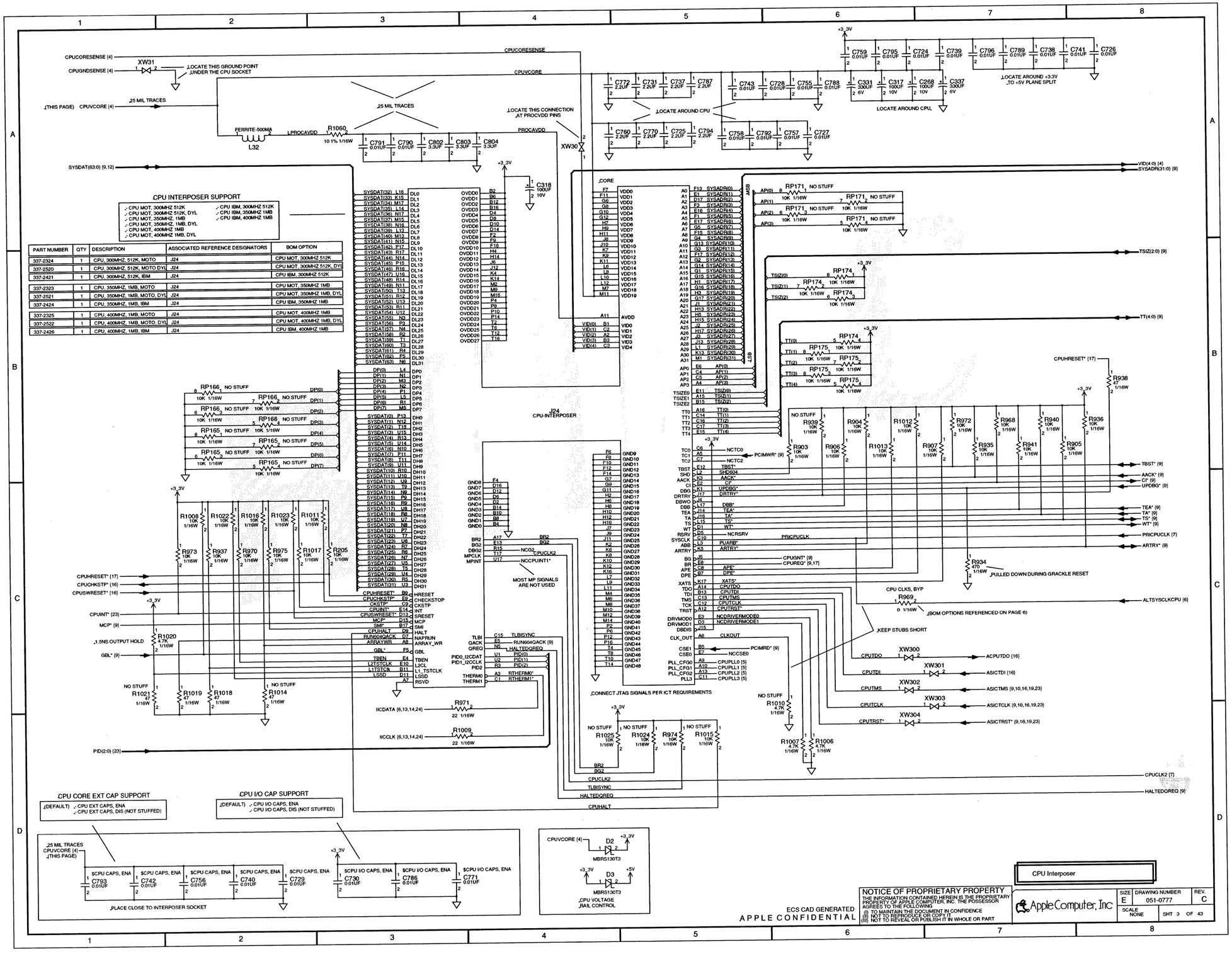
CPU INTERPOSER SUPPORT
CPU MOT, 300MHZ 512K
CPU MOT, 300MHZ 512K, DYL
CPU MOT, 350MHZ, 1MB
CPU MOT, 350MHZ, 1MB, DYL
CPU MOT, 400MHZ 1MB
CPU MOT, 400MHZ 1MB, DYL
CPU IBM, 300MHZ 512K
CPU IBM, 350MHZ 1MB
CPU IBM, 400MHZ 1MB
CPU CORE EXT CAP SUPPORT
(DEFAULT) CPU EXT CAPS, ENA
CPU EXT CAPS, DIS (NOT STUFFED)
CPU I/O CAP SUPPORT
(DEFAULT) CPU I/O CAPS, ENA
CPU I/O CAPS, DIS (NOT STUFFED)
J24
CPU-INTERPOSER
CPU CLKS, BYP
(BOM OPTIONS REFERENCED ON PAGE 6)
KEEP STUBS SHORT
PULLED DOWN DURING GRACKLE RESET
CONNECT JTAG SIGNALS PER ICT REQUIREMENTS
MOST MP SIGNALS ARE NOT USED
LOCATE THIS GROUND POINT UNDER THE CPU SOCKET
LOCATE THIS CONNECTION AT PROCVDD PINS
LOCATE AROUND CPU
LOCATE AROUND +3.3V TO +5V PLANE SPLIT
PLACE CLOSE TO INTERPOSER SOCKET
CPU VOLTAGE RAIL CONTROL
MBRS130T3
ECS CAD GENERATED
APPLE CONFIDENTIAL
NOTICE OF PROPRIETARY PROPERTY
THE INFORMATION CONTAINED HEREIN IS THE PROPRIETARY PROPERTY OF APPLE COMPUTER, INC. THE POSSESSOR AGREES TO THE FOLLOWING
(I) TO MAINTAIN THE DOCUMENT IN CONFIDENCE
(II) NOT TO REPRODUCE OR COPY IT
(III) NOT TO REVEAL OR PUBLISH IT IN WHOLE OR PART
CPU Interposer
Apple Computer, Inc
SIZE E
DRAWING NUMBER 051-0777
REV. C
SCALE NONE
SHT 3 OF 43

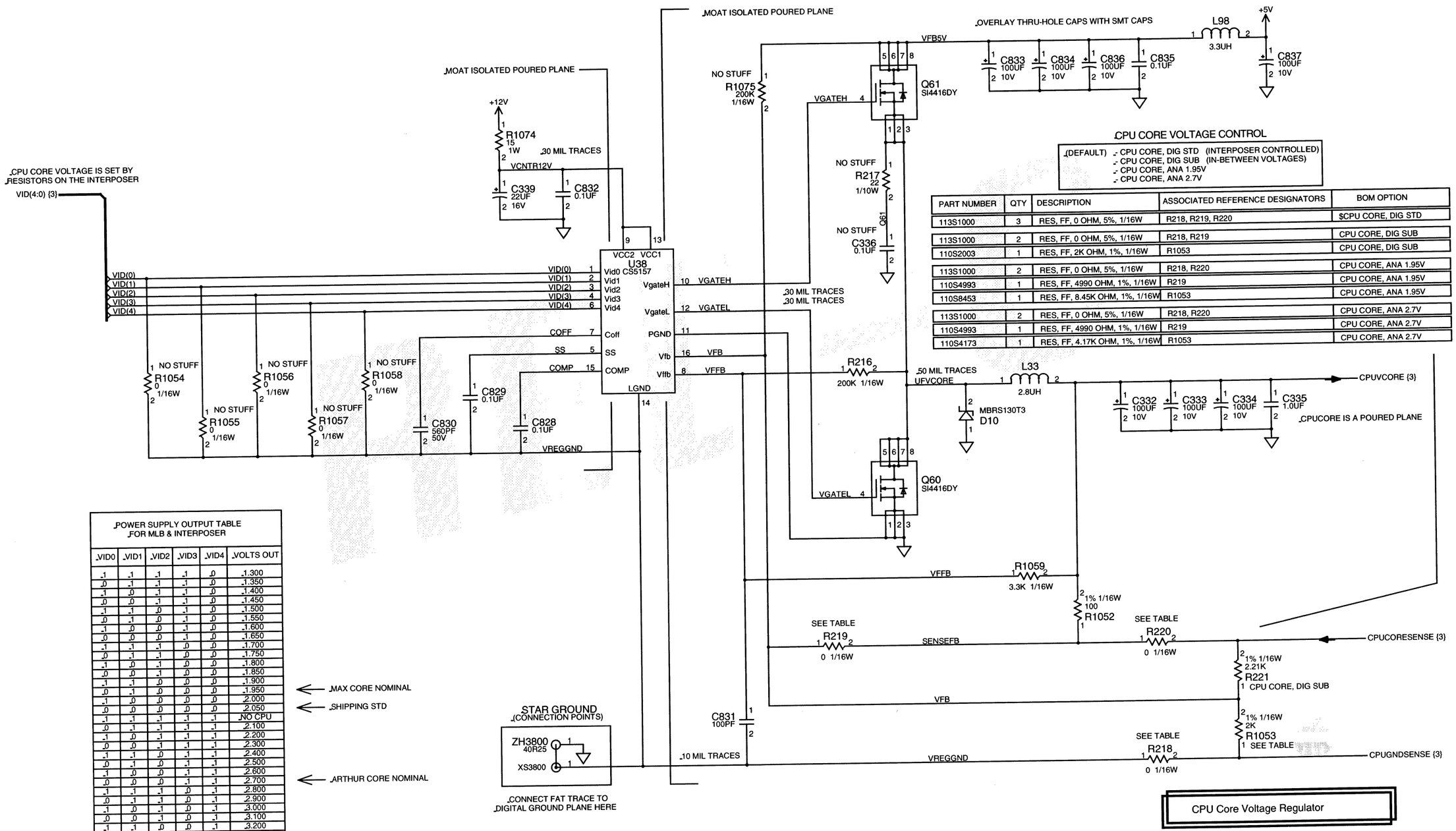

CPU CORE VOLTAGE CONTROL

(DEFAULT) - CPU CORE, DIG STD (INTERPOSER CONTROLLED)
- CPU CORE, DIG SUB (IN-BETWEEN VOLTAGES)
- CPU CORE, ANA 1.95V
- CPU CORE, ANA 2.7V

PART NUMBER	QTY	DESCRIPTION	ASSOCIATED REFERENCE DESIGNATORS	BOM OPTION
113S1000	3	RES, FF, 0 OHM, 5%, 1/16W	R218, R219, R220	$CPU CORE, DIG STD
113S1000	2	RES, FF, 0 OHM, 5%, 1/16W	R218, R219	CPU CORE, DIG SUB
110S2003	1	RES, FF, 2K OHM, 1%, 1/16W	R1053	CPU CORE, DIG SUB
113S1000	2	RES, FF, 0 OHM, 5%, 1/16W	R218, R220	CPU CORE, ANA 1.95V
110S4993	1	RES, FF, 4990 OHM, 1%, 1/16W	R219	CPU CORE, ANA 1.95V
110S8453	1	RES, FF, 8.45K OHM, 1%, 1/16W	R1053	CPU CORE, ANA 1.95V
113S1000	2	RES, FF, 0 OHM, 5%, 1/16W	R218, R220	CPU CORE, ANA 2.7V
110S4993	1	RES, FF, 4990 OHM, 1%, 1/16W	R219	CPU CORE, ANA 2.7V
110S4173	1	RES, FF, 4.17K OHM, 1%, 1/16W	R1053	CPU CORE, ANA 2.7V

POWER SUPPLY OUTPUT TABLE FOR MLB & INTERPOSER

VID0	VID1	VID2	VID3	VID4	VOLTS OUT
1	1	1	1	0	1.300
0	1	1	1	0	1.350
1	0	1	1	0	1.400
0	0	1	1	0	1.450
1	1	0	1	0	1.500
0	1	0	1	0	1.550
1	0	0	1	0	1.600
0	0	0	1	0	1.650
1	1	1	0	0	1.700
0	1	1	0	0	1.750
1	0	1	0	0	1.800
0	0	1	0	0	1.850
1	1	0	0	0	1.900
0	1	0	0	0	1.950
1	0	0	0	0	2.000
0	0	0	0	0	2.050
1	1	1	1	1	NO CPU
0	1	1	1	1	2.100
1	0	1	1	1	2.200
0	0	1	1	1	2.300
1	1	0	1	1	2.400
0	1	0	1	1	2.500
1	0	0	1	1	2.600
0	0	0	1	1	2.700
1	1	1	0	1	2.800
0	1	1	0	1	2.900
1	0	1	0	1	3.000
0	0	1	0	1	3.100
1	1	0	0	1	3.200
0	1	0	0	1	3.300
1	0	0	0	1	3.400
0	0	0	0	1	3.500

MAX CORE NOMINAL
SHIPPING STD
ARTHUR CORE NOMINAL

NOTICE OF PROPRIETARY PROPERTY
THE INFORMATION CONTAINED HEREIN IS THE PROPRIETARY PROPERTY OF APPLE COMPUTER, INC. THE POSSESSOR AGREES TO THE FOLLOWING
(I) TO MAINTAIN THE DOCUMENT IN CONFIDENCE
(II) NOT TO REPRODUCE OR COPY IT
(III) NOT TO REVEAL OR PUBLISH IT IN WHOLE OR PART

ECS CAD GENERATED
APPLE CONFIDENTIAL

Apple Computer, Inc

SIZE	DRAWING NUMBER	REV.
D	051-0777	C
SCALE NONE	SHT 4 OF 43	

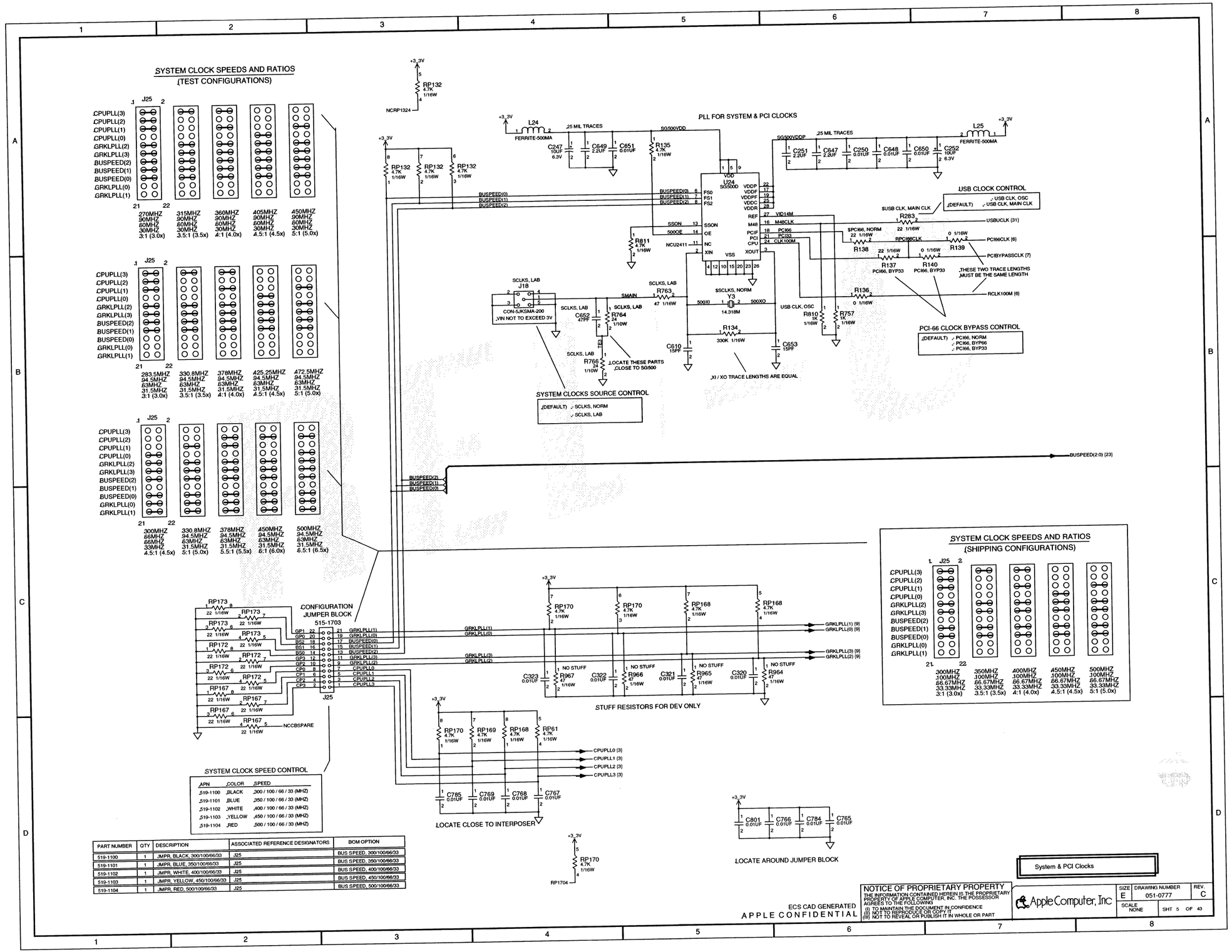

PART NUMBER	QTY	DESCRIPTION	ASSOCIATED REFERENCE DESIGNATORS	BOM OPTION
519-1100	1	JMPR, BLACK, 300/100/66/33	J25	BUS SPEED, 300/100/66/33
519-1101	1	JMPR, BLUE, 350/100/66/33	J25	BUS SPEED, 350/100/66/33
519-1102	1	JMPR, WHITE, 400/100/66/33	J25	BUS SPEED, 400/100/66/33
519-1103	1	JMPR, YELLOW, 450/100/66/33	J25	BUS SPEED, 450/100/66/33
519-1104	1	JMPR, RED, 500/100/66/33	J25	BUS SPEED, 500/100/66/33

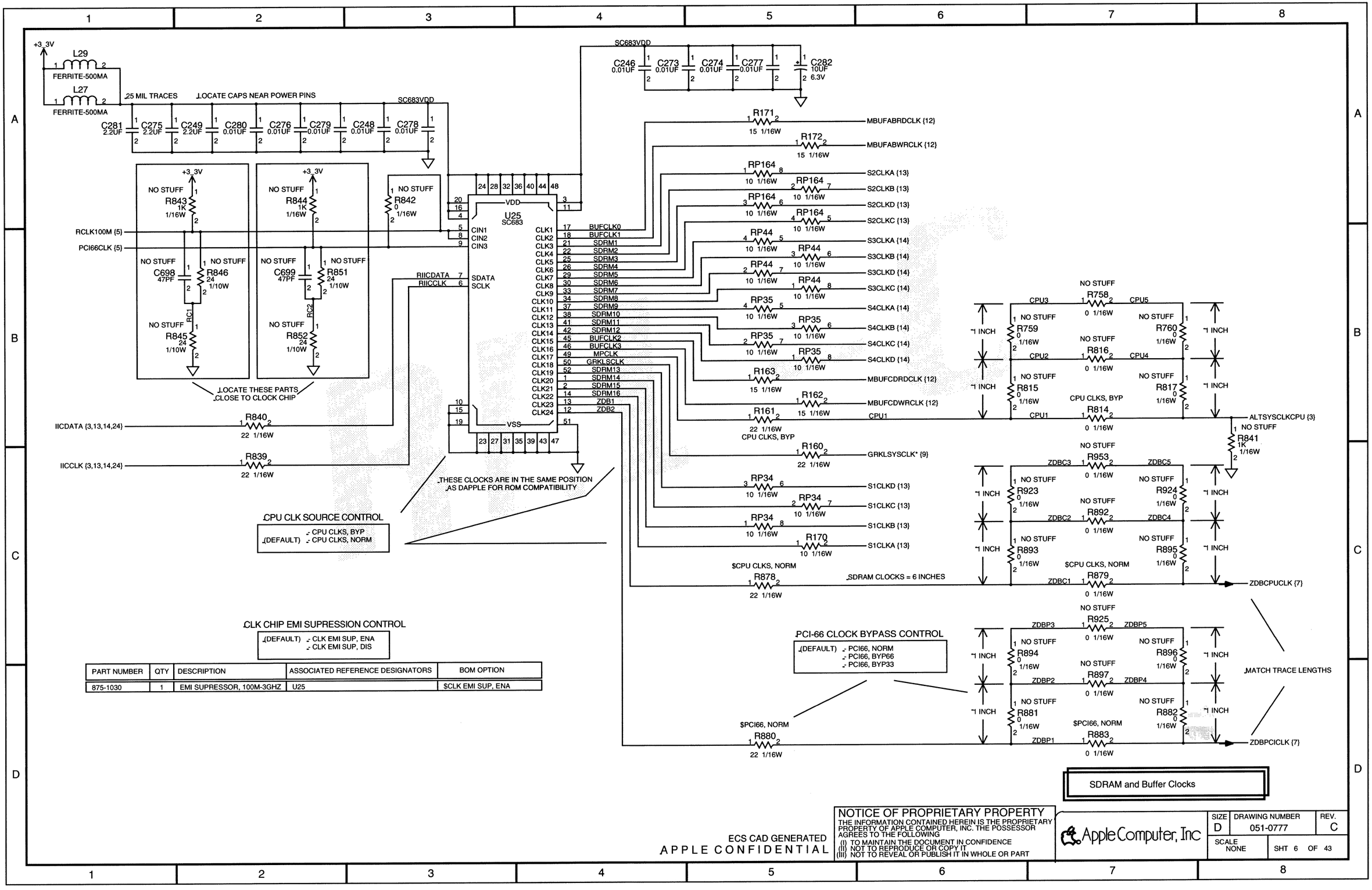

PART NUMBER	QTY	DESCRIPTION	ASSOCIATED REFERENCE DESIGNATORS	BOM OPTION
875-1030	1	EMI SUPRESSOR, 100M-3GHZ	U25	$CLK EMI SUP, ENA

NOTICE OF PROPRIETARY PROPERTY
THE INFORMATION CONTAINED HEREIN IS THE PROPRIETARY PROPERTY OF APPLE COMPUTER, INC. THE POSSESSOR AGREES TO THE FOLLOWING
(I) TO MAINTAIN THE DOCUMENT IN CONFIDENCE
(II) NOT TO REPRODUCE OR COPY IT
(III) NOT TO REVEAL OR PUBLISH IT IN WHOLE OR PART

ECS CAD GENERATED
APPLE CONFIDENTIAL

Apple Computer, Inc

SIZE	DRAWING NUMBER	REV.
D	051-0777	C
SCALE NONE	SHT 6 OF 43	

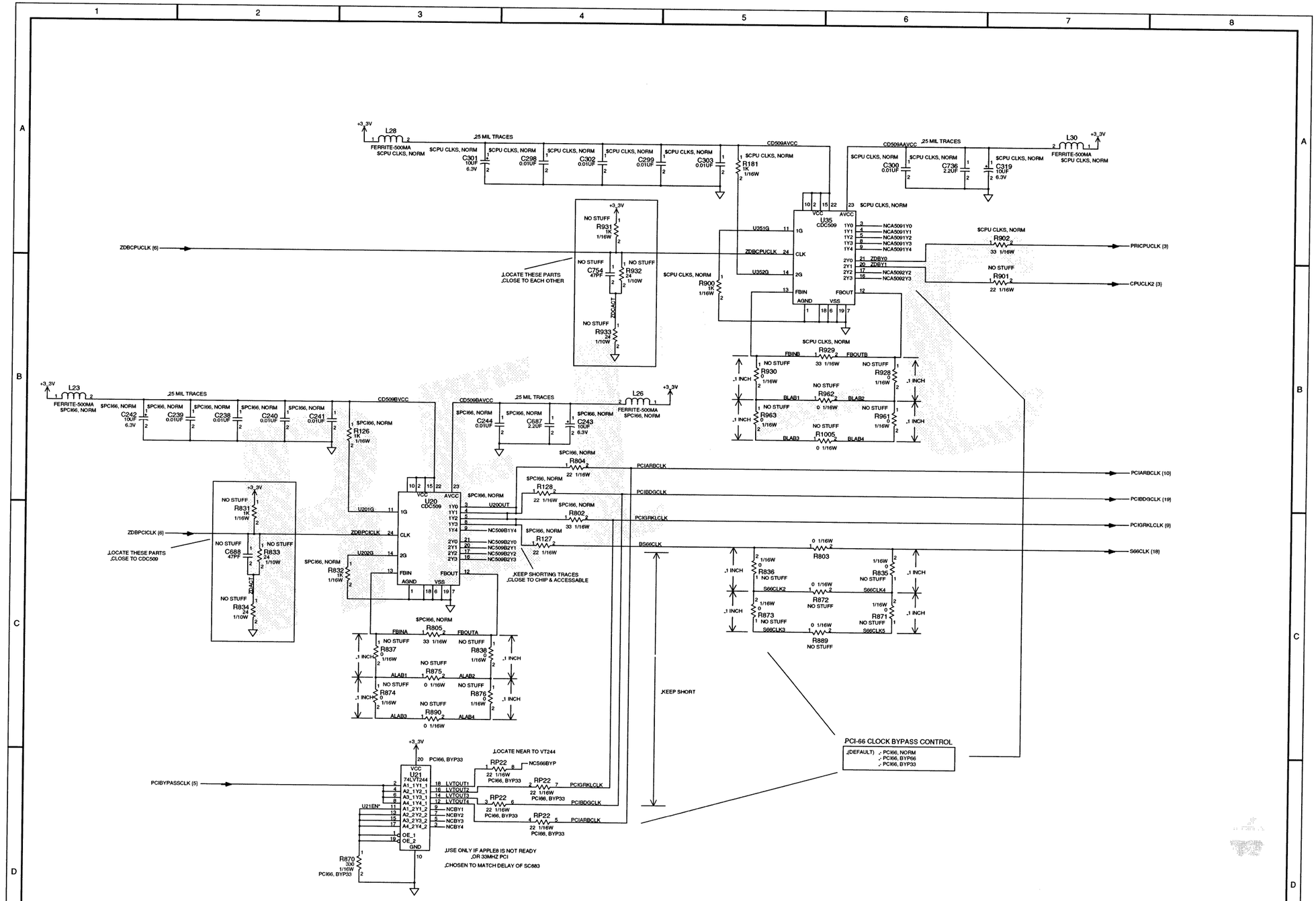

Zero Delay Buffer Clocks

ECS CAD GENERATED
APPLE CONFIDENTIAL

NOTICE OF PROPRIETARY PROPERTY
THE INFORMATION CONTAINED HEREIN IS THE PROPRIETARY PROPERTY OF APPLE COMPUTER, INC. THE POSSESSOR AGREES TO THE FOLLOWING
(I) TO MAINTAIN THE DOCUMENT IN CONFIDENCE
(II) NOT TO REPRODUCE OR COPY IT
(III) NOT TO REVEAL OR PUBLISH IT IN WHOLE OR PART

Apple Computer, Inc

SIZE	DRAWING NUMBER	REV.
E	051-0777	C
SCALE NONE	SHT 7 OF 43	

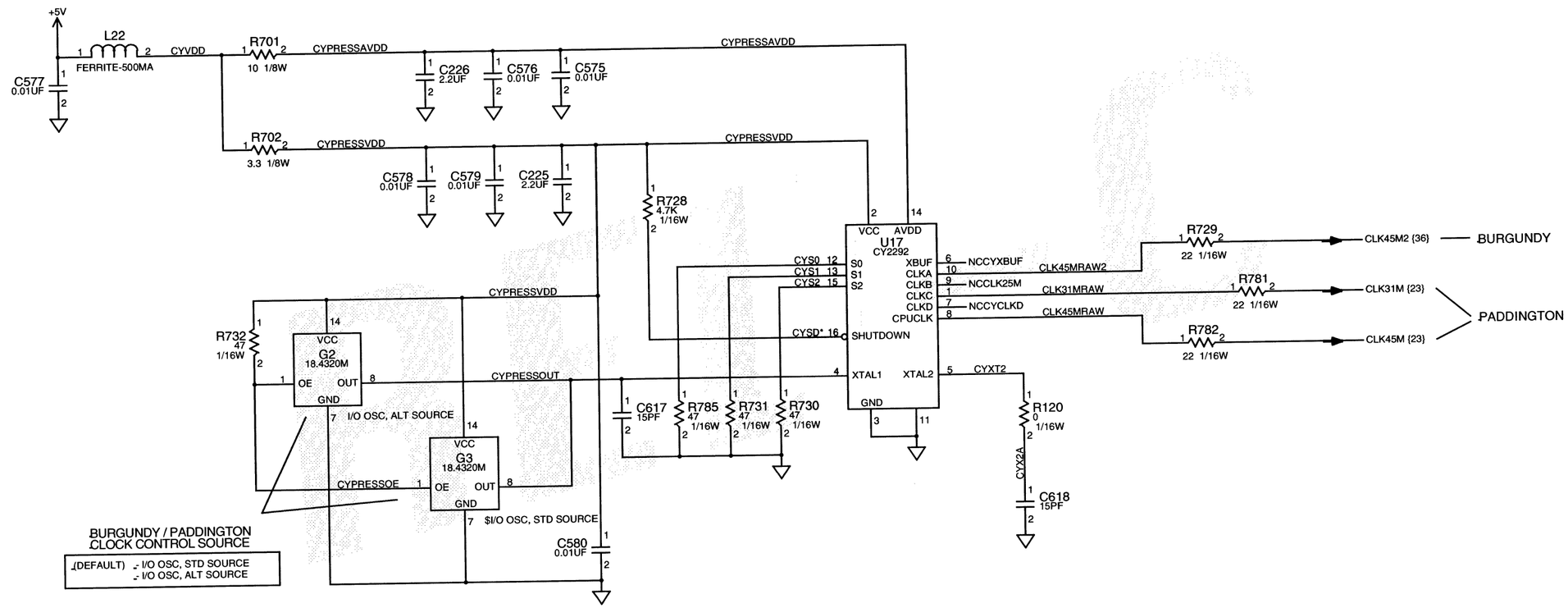

Other Clocks

NOTICE OF PROPRIETARY PROPERTY
THE INFORMATION CONTAINED HEREIN IS THE PROPRIETARY PROPERTY OF APPLE COMPUTER, INC. THE POSSESSOR AGREES TO THE FOLLOWING
(I) TO MAINTAIN THE DOCUMENT IN CONFIDENCE
(II) NOT TO REPRODUCE OR COPY IT
(III) NOT TO REVEAL OR PUBLISH IT IN WHOLE OR PART

ECS CAD GENERATED
APPLE CONFIDENTIAL

Apple Computer, Inc

SIZE	DRAWING NUMBER	REV.
D	051-0777	C
SCALE NONE	SHT 8 OF 43	

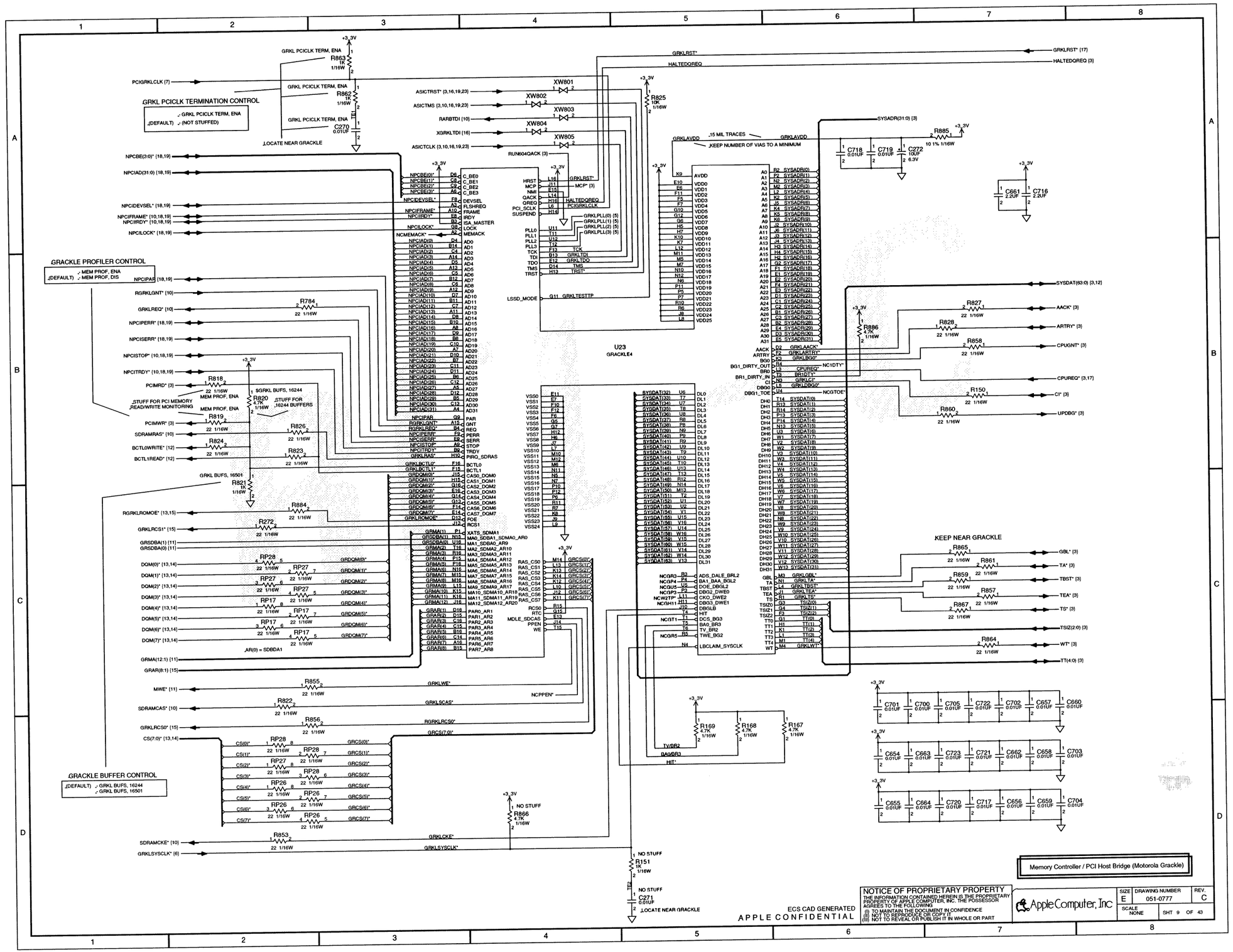
GRKL PCICLK TERMINATION CONTROL
GRKL PCICLK TERM, ENA
(DEFAULT) (NOT STUFFED)
GRAKLE PROFILER CONTROL
MEM PROF, ENA
(DEFAULT) MEM PROF, DIS
GRACKLE BUFFER CONTROL
(DEFAULT) GRKL BUFS, 16244
GRKL BUFS, 16501
U23
GRACKLE4
KEEP NEAR GRACKLE
Memory Controller / PCI Host Bridge (Motorola Grackle)
NOTICE OF PROPRIETARY PROPERTY
THE INFORMATION CONTAINED HEREIN IS THE PROPRIETARY PROPERTY OF APPLE COMPUTER, INC. THE POSSESSOR AGREES TO THE FOLLOWING
(I) TO MAINTAIN THE DOCUMENT IN CONFIDENCE
(II) NOT TO REPRODUCE OR COPY IT
(III) NOT TO REVEAL OR PUBLISH IT IN WHOLE OR PART
ECS CAD GENERATED
APPLE CONFIDENTIAL
Apple Computer, Inc
SIZE E
DRAWING NUMBER 051-0777
REV. C
SCALE NONE
SHT 9 OF 43

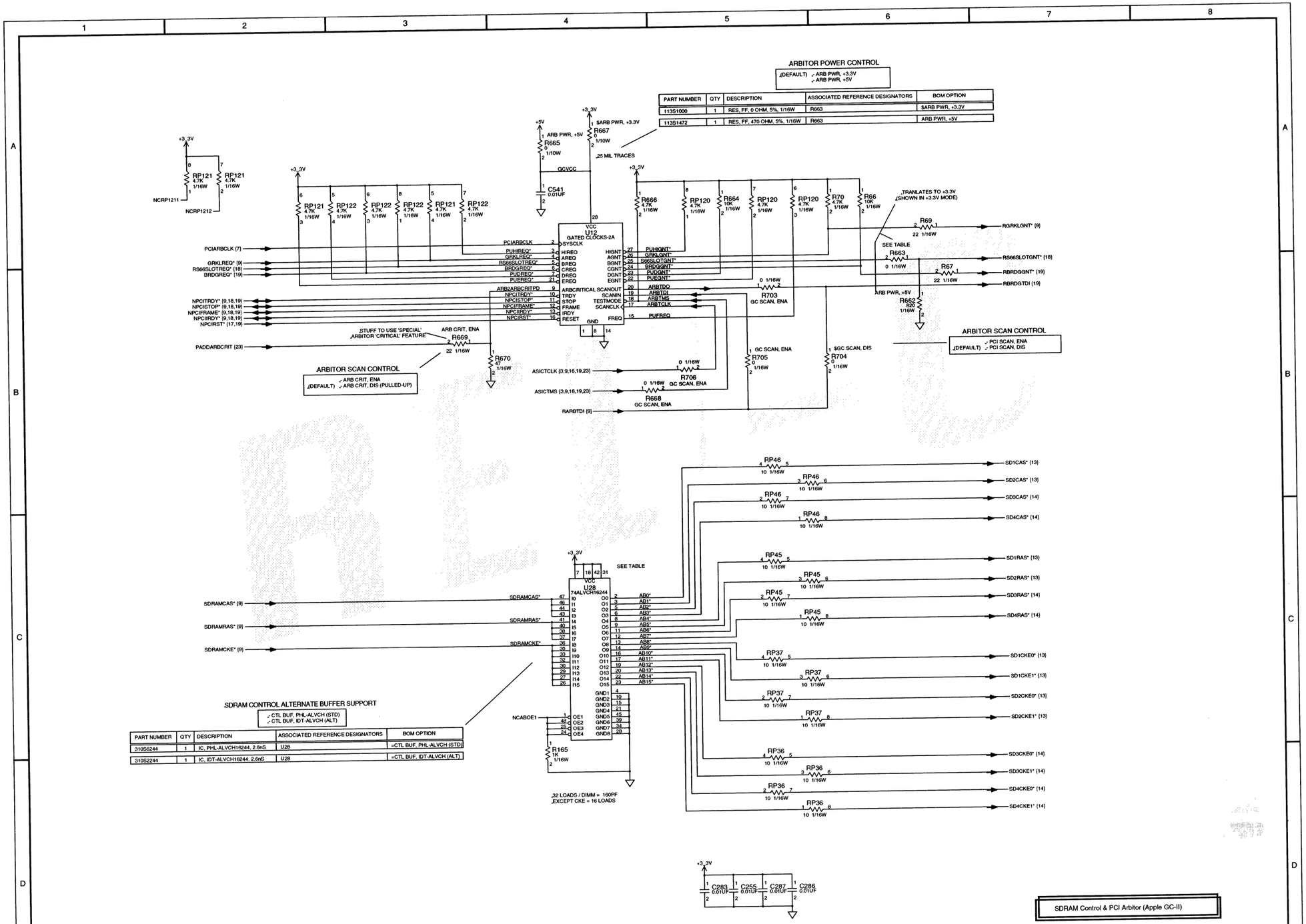

PART NUMBER	QTY	DESCRIPTION	ASSOCIATED REFERENCE DESIGNATORS	BOM OPTION
113S1000	1	RES, FF, 0 OHM, 5%, 1/16W	R663	$ARB PWR, +3.3V
113S1472	1	RES, FF, 470 OHM, 5%, 1/16W	R663	ARB PWR, +5V

PART NUMBER	QTY	DESCRIPTION	ASSOCIATED REFERENCE DESIGNATORS	BOM OPTION
310S6244	1	IC, PHL-ALVCH16244, 2.6nS	U28	=CTL BUF, PHL-ALVCH (STD)
310S2244	1	IC, IDT-ALVCH16244, 2.6nS	U28	=CTL BUF, IDT-ALVCH (ALT)

NOTICE OF PROPRIETARY PROPERTY
THE INFORMATION CONTAINED HEREIN IS THE PROPRIETARY PROPERTY OF APPLE COMPUTER, INC. THE POSSESSOR AGREES TO THE FOLLOWING
(I) TO MAINTAIN THE DOCUMENT IN CONFIDENCE
(II) NOT TO REPRODUCE OR COPY IT
(III) NOT TO REVEAL OR PUBLISH IT IN WHOLE OR PART

ECS CAD GENERATED
APPLE CONFIDENTIAL

Apple Computer, Inc

SIZE	DRAWING NUMBER	REV.
E	051-0777	C
SCALE NONE	SHT 10 OF 43	

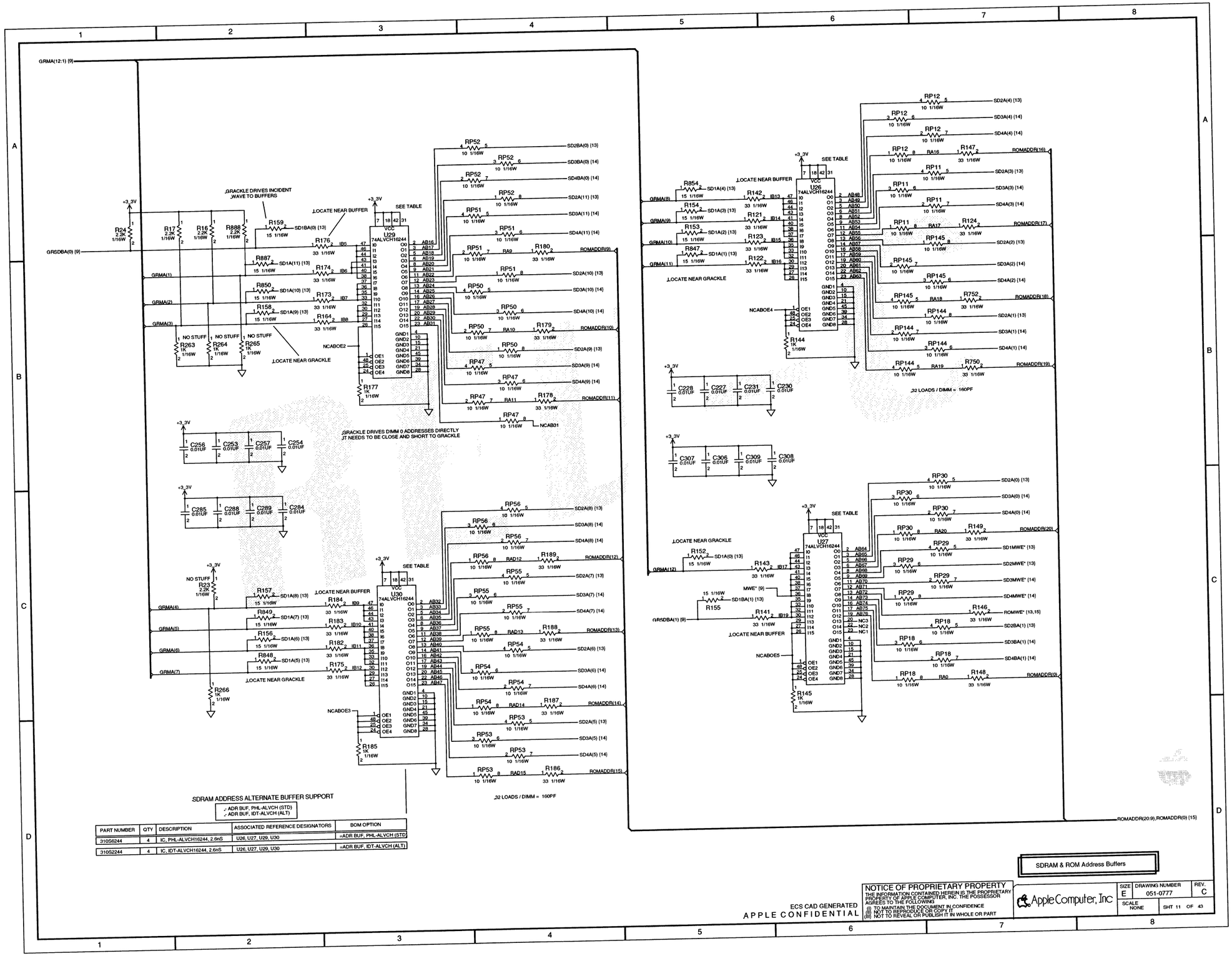

SDRAM ADDRESS ALTERNATE BUFFER SUPPORT

;- ADR BUF, PHL-ALVCH (STD)
;- ADR BUF, IDT-ALVCH (ALT)

PART NUMBER	QTY	DESCRIPTION	ASSOCIATED REFERENCE DESIGNATORS	BOM OPTION
310S6244	4	IC, PHL-ALVCH16244, 2.6nS	U26, U27, U29, U30	=ADR BUF, PHL-ALVCH (STD)
310I6244	4	IC, IDT-ALVCH16244, 2.6nS	U26, U27, U29, U30	=ADR BUF, IDT-ALVCH (ALT)

SDRAM & ROM Address Buffers

NOTICE OF PROPRIETARY PROPERTY
THE INFORMATION CONTAINED HEREIN IS THE PROPRIETARY PROPERTY OF APPLE COMPUTER, INC. THE POSSESSOR AGREES TO THE FOLLOWING
(I) TO MAINTAIN THE DOCUMENT IN CONFIDENCE
(II) NOT TO REPRODUCE OR COPY IT
(III) NOT TO REVEAL OR PUBLISH IT IN WHOLE OR PART

Apple Computer, Inc

SIZE	DRAWING NUMBER	REV.
E	051-0777	C
SCALE NONE	SHT 11 OF 43	

ECS CAD GENERATED
APPLE CONFIDENTIAL

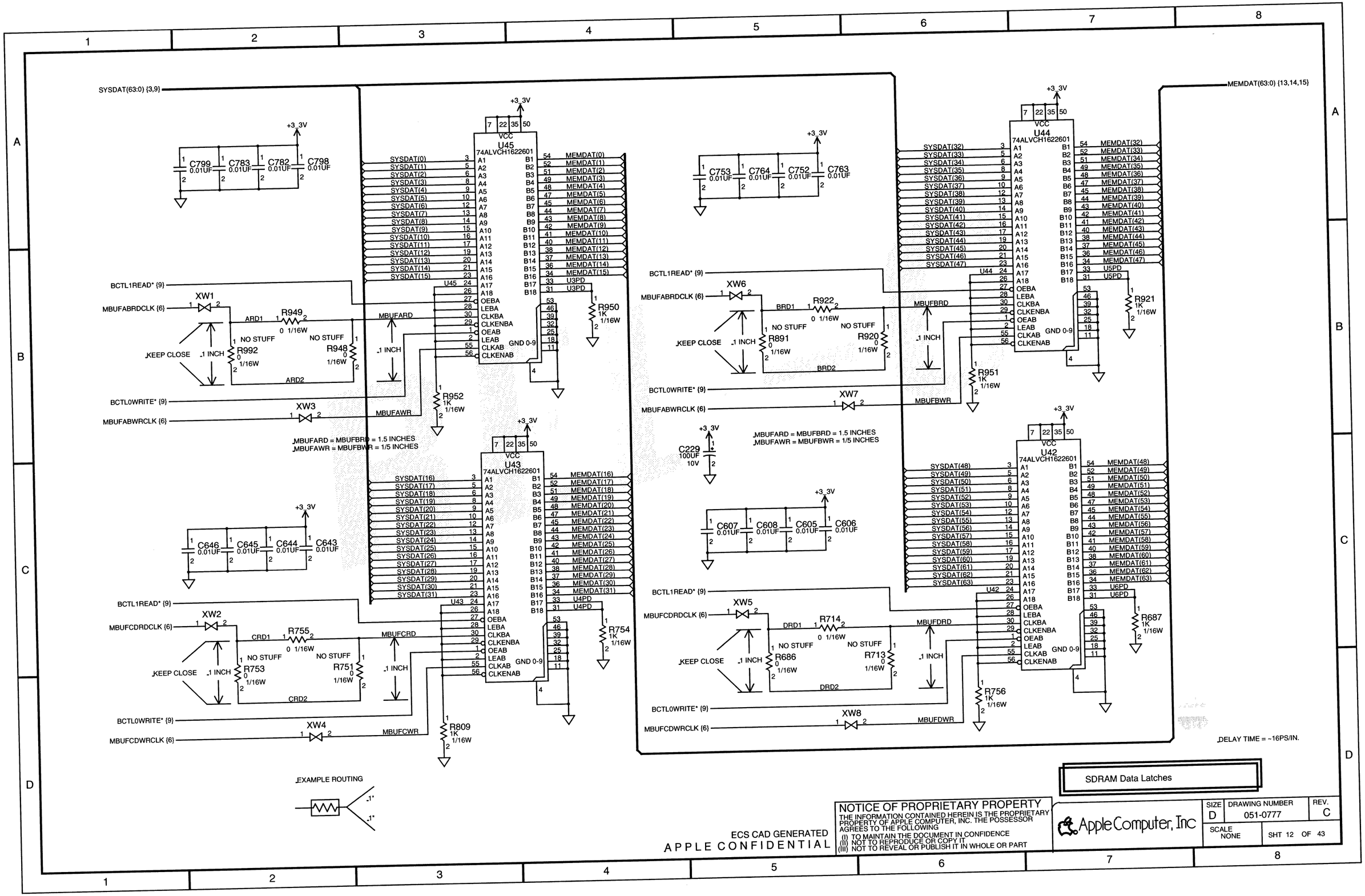

SDRAM Data Latches

NOTICE OF PROPRIETARY PROPERTY
THE INFORMATION CONTAINED HEREIN IS THE PROPRIETARY PROPERTY OF APPLE COMPUTER, INC. THE POSSESSOR AGREES TO THE FOLLOWING
(I) TO MAINTAIN THE DOCUMENT IN CONFIDENCE
(II) NOT TO REPRODUCE OR COPY IT
(III) NOT TO REVEAL OR PUBLISH IT IN WHOLE OR PART

Apple Computer, Inc

SIZE	DRAWING NUMBER	REV.
D	051-0777	C
SCALE NONE	SHT 12 OF 43	

ECS CAD GENERATED
APPLE CONFIDENTIAL

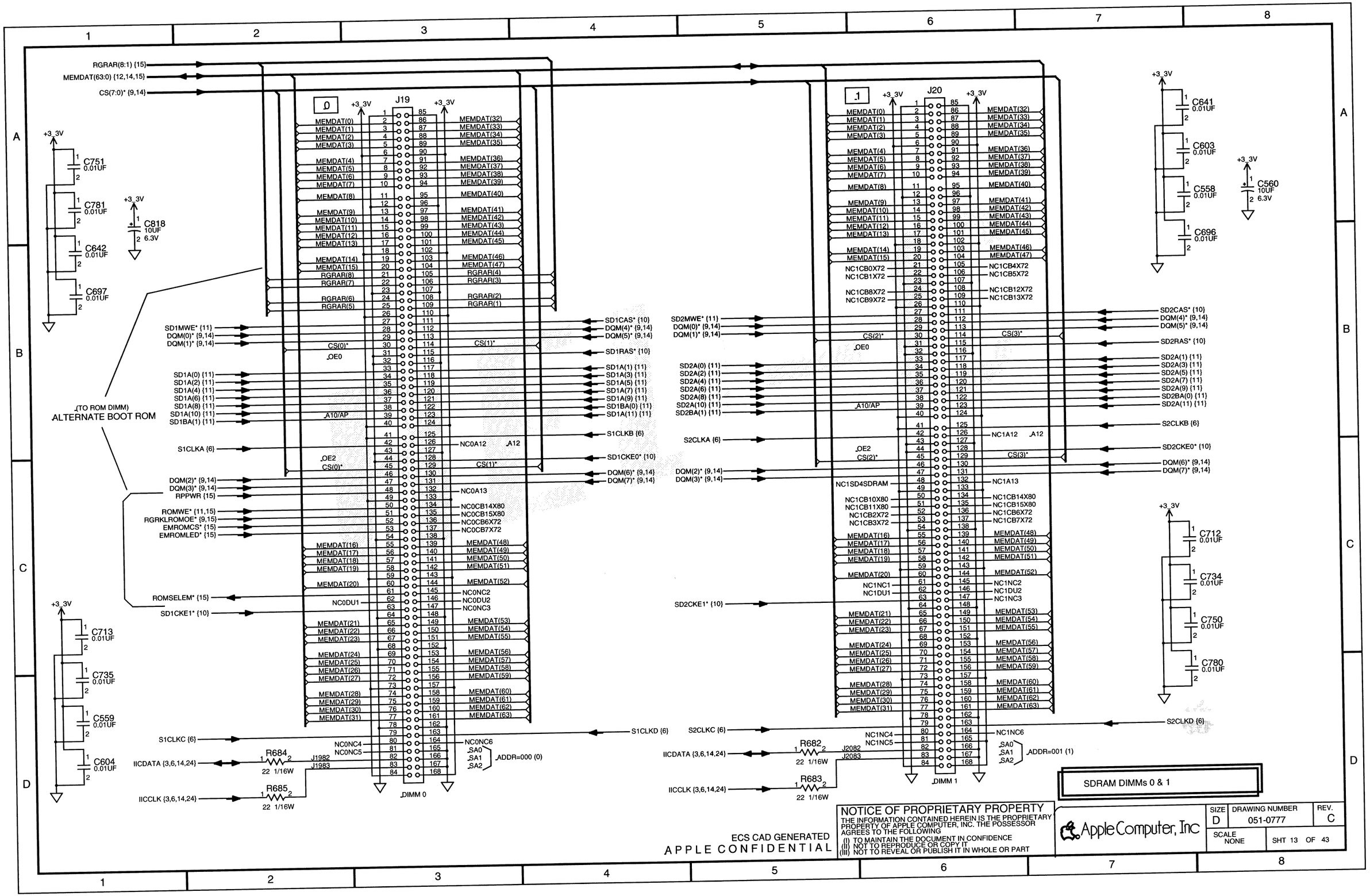
RGRAR(8:1) {15}
MEMDAT(63:0) {12,14,15}
CS(7:0)* {9,14}
J19
J20
0
1
+3_3V
C751 0.01UF
C781 0.01UF
C642 0.01UF
C697 0.01UF
C818 10UF 6.3V
C641 0.01UF
C603 0.01UF
C558 0.01UF
C696 0.01UF
C560 10UF 6.3V
C713 0.01UF
C735 0.01UF
C559 0.01UF
C604 0.01UF
C712 0.01UF
C734 0.01UF
C750 0.01UF
C780 0.01UF
(TO ROM DIMM)
ALTERNATE BOOT ROM
SD1MWE* {11}
DQM(0)* {9,14}
DQM(1)* {9,14}
SD1A(0) {11}
SD1A(2) {11}
SD1A(4) {11}
SD1A(6) {11}
SD1A(8) {11}
SD1A(10) {11}
SD1BA(1) {11}
S1CLKA {6}
DQM(2)* {9,14}
DQM(3)* {9,14}
RPPWR {15}
ROMWE* {11,15}
RGRKLROMOE* {9,15}
EMROMCS* {15}
EMROMLED* {15}
ROMSELEM* {15}
SD1CKE1* {10}
S1CLKC {6}
IICDATA {3,6,14,24}
IICCLK {3,6,14,24}
R684 22 1/16W
R685 22 1/16W
J1982
J1983
DIMM 0
ADDR=000 (0)
SD1CAS* {10}
DQM(4)* {9,14}
DQM(5)* {9,14}
SD1RAS* {10}
SD1A(1) {11}
SD1A(3) {11}
SD1A(5) {11}
SD1A(7) {11}
SD1A(9) {11}
SD1BA(0) {11}
SD1A(11) {11}
S1CLKB {6}
SD1CKE0* {10}
DQM(6)* {9,14}
DQM(7)* {9,14}
S1CLKD {6}
SD2MWE* {11}
DQM(0)* {9,14}
DQM(1)* {9,14}
SD2A(0) {11}
SD2A(2) {11}
SD2A(4) {11}
SD2A(6) {11}
SD2A(8) {11}
SD2A(10) {11}
SD2BA(1) {11}
S2CLKA {6}
DQM(2)* {9,14}
DQM(3)* {9,14}
SD2CKE1* {10}
S2CLKC {6}
IICDATA {3,6,14,24}
IICCLK {3,6,14,24}
R682 22 1/16W
R683 22 1/16W
J2082
J2083
DIMM 1
ADDR=001 (1)
SD2CAS* {10}
DQM(4)* {9,14}
DQM(5)* {9,14}
SD2RAS* {10}
SD2A(1) {11}
SD2A(3) {11}
SD2A(5) {11}
SD2A(7) {11}
SD2A(9) {11}
SD2BA(0) {11}
SD2A(11) {11}
S2CLKB {6}
SD2CKE0* {10}
DQM(6)* {9,14}
DQM(7)* {9,14}
S2CLKD {6}
SDRAM DIMMs 0 & 1
NOTICE OF PROPRIETARY PROPERTY
THE INFORMATION CONTAINED HEREIN IS THE PROPRIETARY PROPERTY OF APPLE COMPUTER, INC. THE POSSESSOR AGREES TO THE FOLLOWING
(I) TO MAINTAIN THE DOCUMENT IN CONFIDENCE
(II) NOT TO REPRODUCE OR COPY IT
(III) NOT TO REVEAL OR PUBLISH IT IN WHOLE OR PART
ECS CAD GENERATED
APPLE CONFIDENTIAL
Apple Computer, Inc
SIZE D
DRAWING NUMBER 051-0777
REV. C
SCALE NONE
SHT 13 OF 43

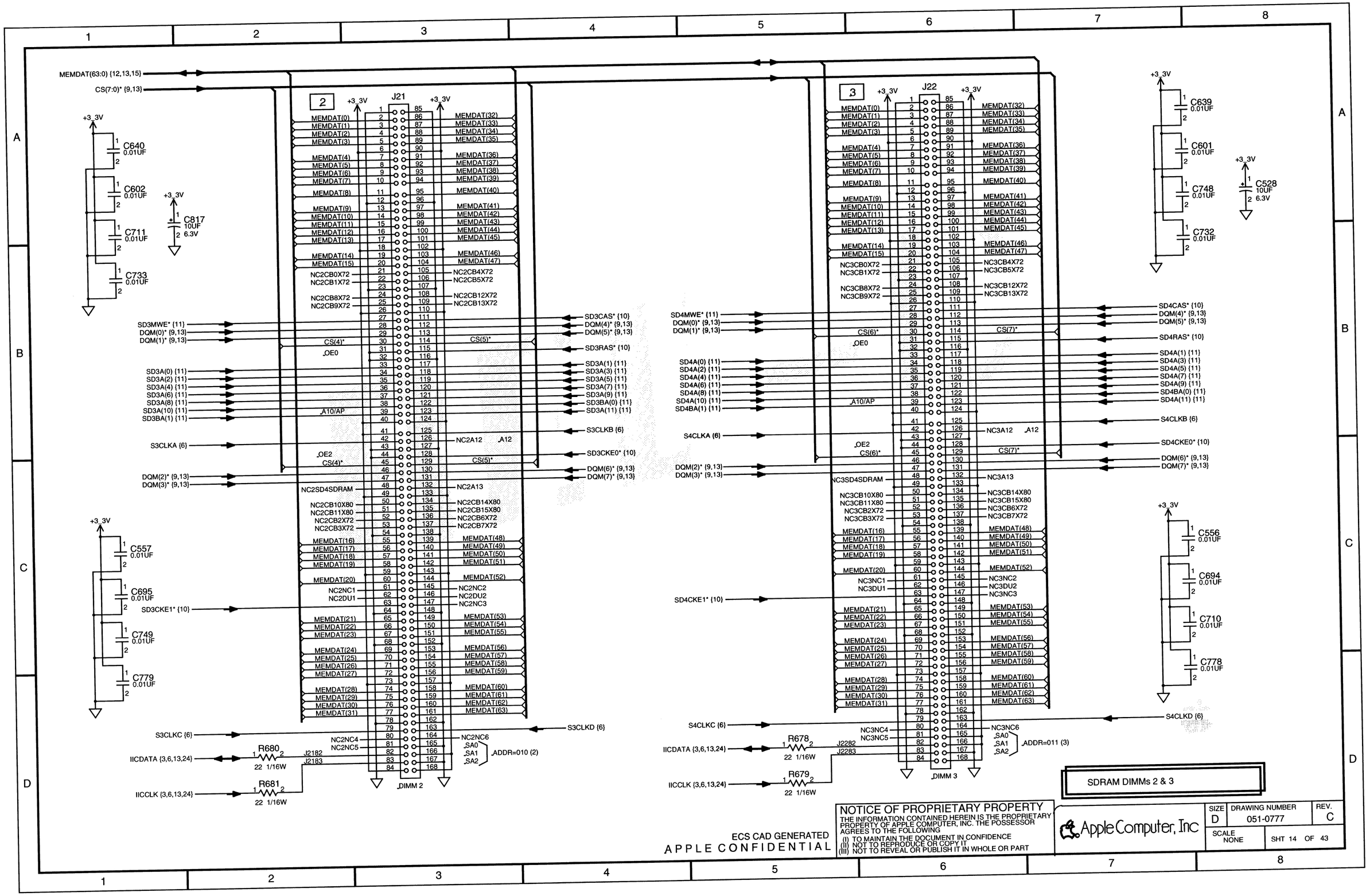
MEMDAT(63:0) {12,13,15}
CS(7:0)* {9,13}
J21
J22
DIMM 2
DIMM 3
ADDR=010 (2)
ADDR=011 (3)
SDRAM DIMMs 2 & 3
ECS CAD GENERATED
APPLE CONFIDENTIAL
NOTICE OF PROPRIETARY PROPERTY
THE INFORMATION CONTAINED HEREIN IS THE PROPRIETARY PROPERTY OF APPLE COMPUTER, INC. THE POSSESSOR AGREES TO THE FOLLOWING
(I) TO MAINTAIN THE DOCUMENT IN CONFIDENCE
(II) NOT TO REPRODUCE OR COPY IT
(III) NOT TO REVEAL OR PUBLISH IT IN WHOLE OR PART
Apple Computer, Inc
SIZE D
DRAWING NUMBER 051-0777
REV. C
SCALE NONE
SHT 14 OF 43

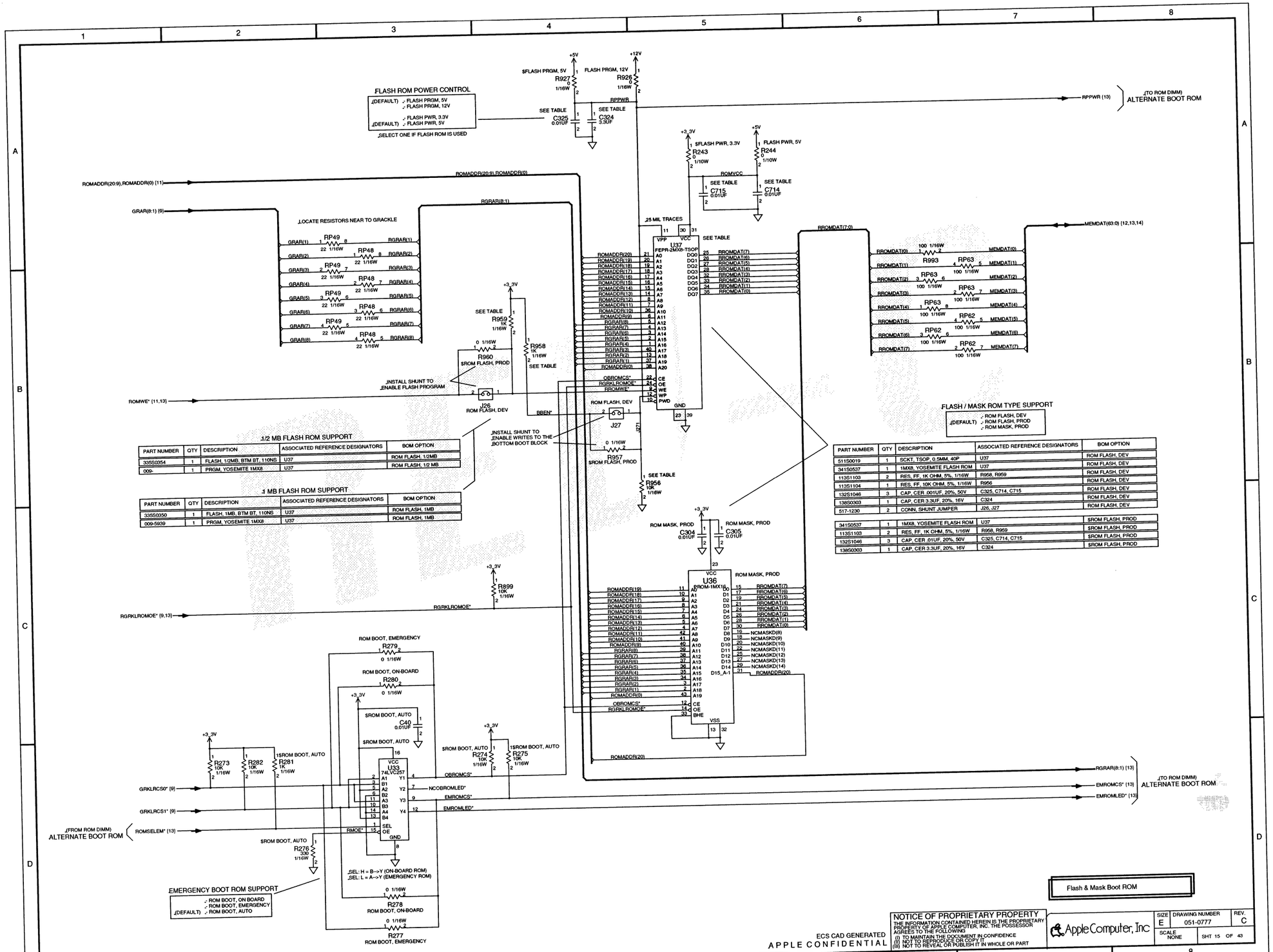
FLASH ROM POWER CONTROL
(DEFAULT) - FLASH PRGM, 5V
- FLASH PRGM, 12V
(DEFAULT) - FLASH PWR, 3.3V
- FLASH PWR, 5V
SELECT ONE IF FLASH ROM IS USED
$FLASH PRGM, 5V
FLASH PRGM, 12V
$FLASH PWR, 3.3V
FLASH PWR, 5V
SEE TABLE
RPPWR
RPPWR (13)
(TO ROM DIMM)
ALTERNATE BOOT ROM
ROMADDR(20:9),ROMADDR(0) (11)
GRAR(8:1) (9)
LOCATE RESISTORS NEAR TO GRACKLE
.25 MIL TRACES
U37
FEPR-2MX8-TSOP
MEMDAT(63:0) (12,13,14)
ROMWE* (11,13)
INSTALL SHUNT TO ENABLE FLASH PROGRAM
$ROM FLASH, PROD
ROM FLASH, DEV
J26
J27
BBEN*
INSTALL SHUNT TO ENABLE WRITES TO THE BOTTOM BOOT BLOCK
FLASH / MASK ROM TYPE SUPPORT
(DEFAULT) - ROM FLASH, DEV
- ROM FLASH, PROD
- ROM MASK, PROD
1/2 MB FLASH ROM SUPPORT
3 MB FLASH ROM SUPPORT
ROM MASK, PROD
U36
EPROM-1MX16
RGRKLROMOE* (9,13)
ROM BOOT, EMERGENCY
ROM BOOT, ON-BOARD
$ROM BOOT, AUTO
U133
74LVC257
GRKLRCS0* (9)
GRKLRCS1* (9)
(FROM ROM DIMM)
ALTERNATE BOOT ROM
ROMSELEM* (13)
SEL: H = B-->Y (ON-BOARD ROM)
SEL: L = A-->Y (EMERGENCY ROM)
EMERGENCY BOOT ROM SUPPORT
(DEFAULT) - ROM BOOT, ON BOARD
- ROM BOOT, EMERGENCY
- ROM BOOT, AUTO
RGRAR(8:1) (13)
EMROMCS* (13)
EMROMLED* (13)
(TO ROM DIMM)
ALTERNATE BOOT ROM
Flash & Mask Boot ROM
NOTICE OF PROPRIETARY PROPERTY
THE INFORMATION CONTAINED HEREIN IS THE PROPRIETARY PROPERTY OF APPLE COMPUTER, INC. THE POSSESSOR AGREES TO THE FOLLOWING:
(I) TO MAINTAIN THE DOCUMENT IN CONFIDENCE
(II) NOT TO REPRODUCE OR COPY IT
(III) NOT TO REVEAL OR PUBLISH IT IN WHOLE OR PART
ECS CAD GENERATED
APPLE CONFIDENTIAL
Apple Computer, Inc
SIZE E
DRAWING NUMBER 051-0777
REV. C
SCALE NONE
SHT 15 OF 43

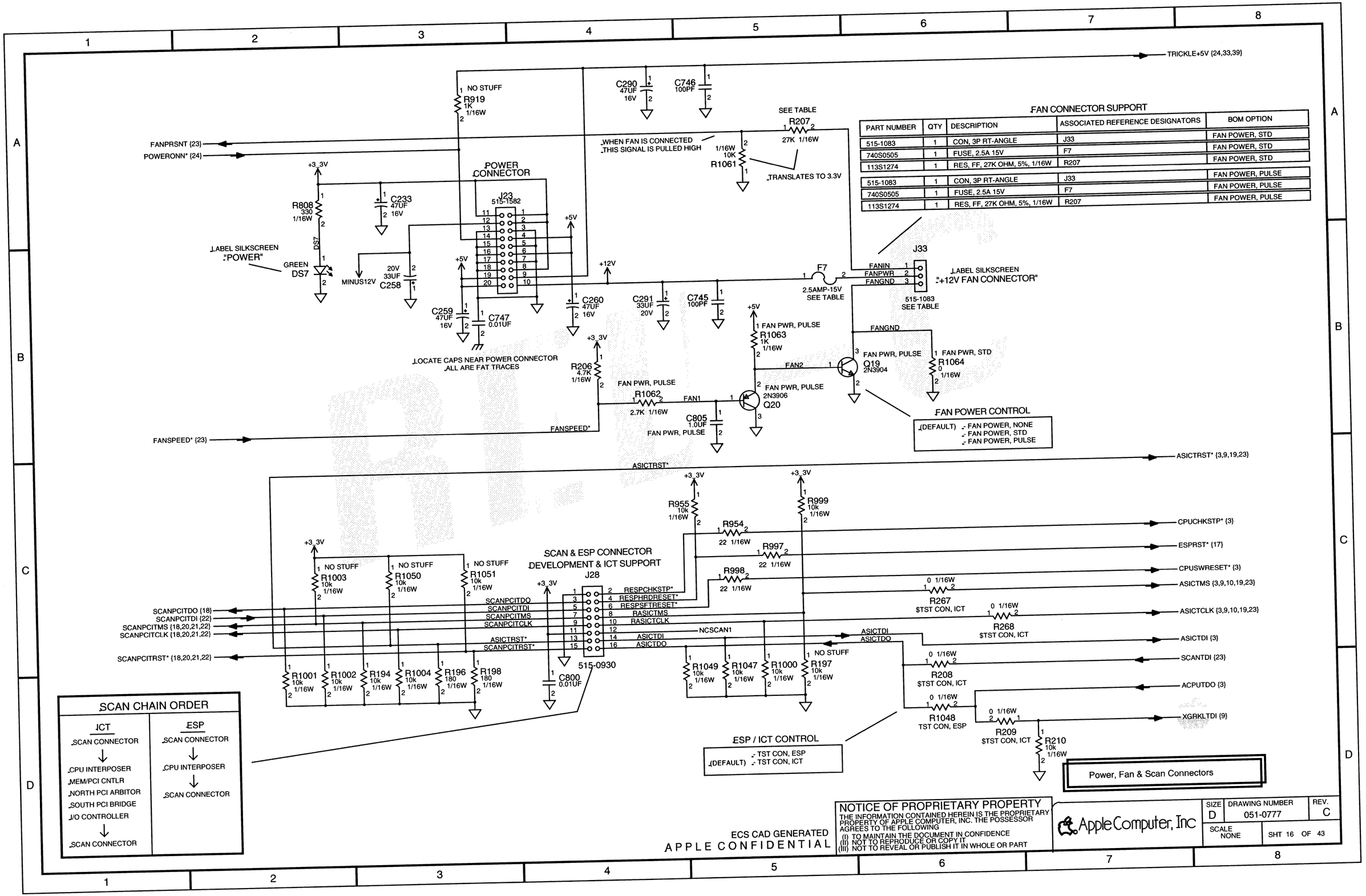

PART NUMBER	QTY	DESCRIPTION	ASSOCIATED REFERENCE DESIGNATORS	BOM OPTION
515-1083	1	CON, 3P RT-ANGLE	J33	FAN POWER, STD
740S0505	1	FUSE, 2.5A 15V	F7	FAN POWER, STD
113S1274	1	RES, FF, 27K OHM, 5%, 1/16W	R207	FAN POWER, STD
515-1083	1	CON, 3P RT-ANGLE	J33	FAN POWER, PULSE
740S0505	1	FUSE, 2.5A 15V	F7	FAN POWER, PULSE
113S1274	1	RES, FF, 27K OHM, 5%, 1/16W	R207	FAN POWER, PULSE

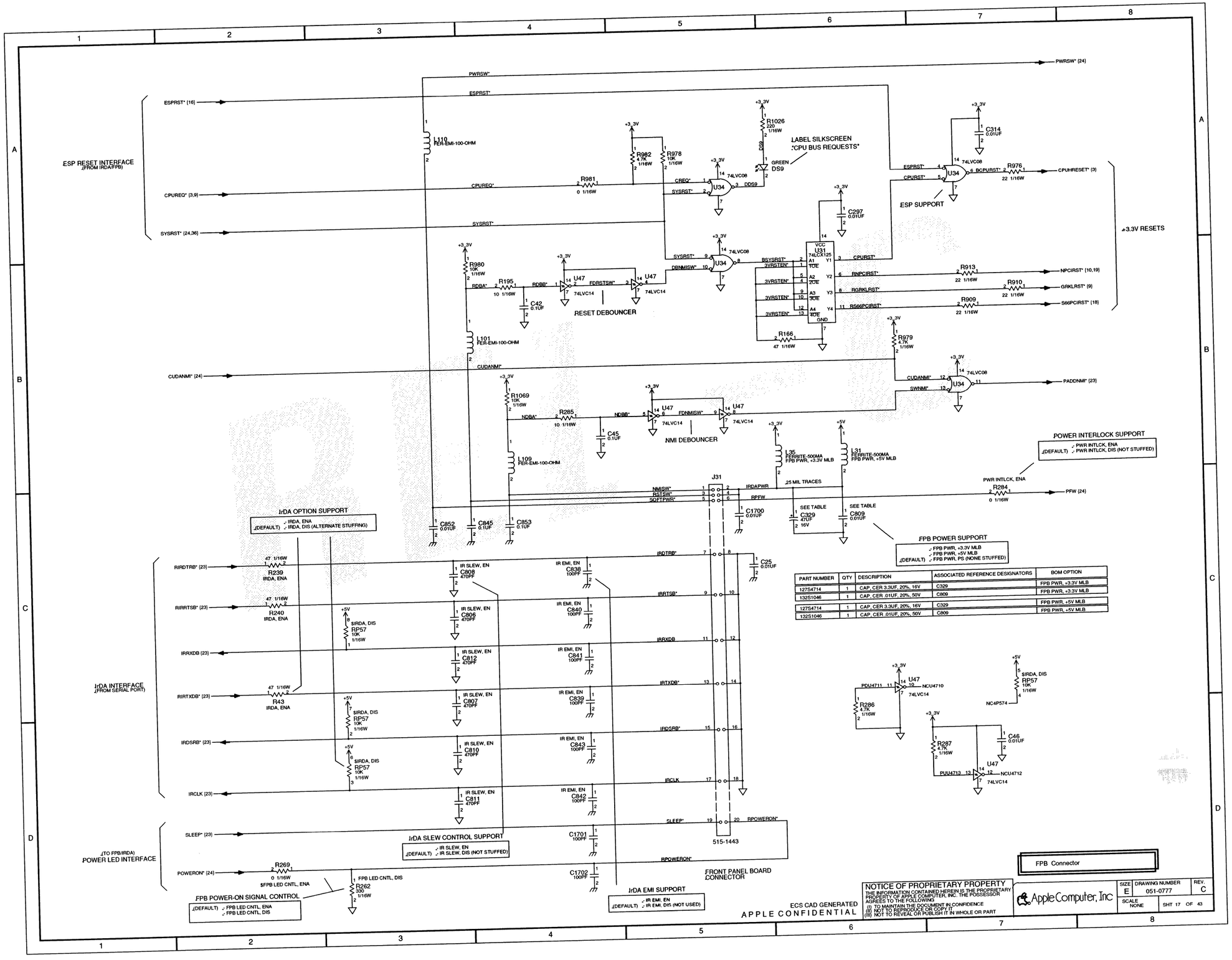

PART NUMBER	QTY	DESCRIPTION	ASSOCIATED REFERENCE DESIGNATORS	BOM OPTION
127S4714	1	CAP, CER 3.3UF, 20%, 16V	C329	FPB PWR, +3.3V MLB
132S1046	1	CAP, CER .01UF, 20%, 50V	C809	FPB PWR, +3.3V MLB
127S4714	1	CAP, CER 3.3UF, 20%, 16V	C329	FPB PWR, +5V MLB
132S1046	1	CAP, CER .01UF, 20%, 50V	C809	FPB PWR, +5V MLB

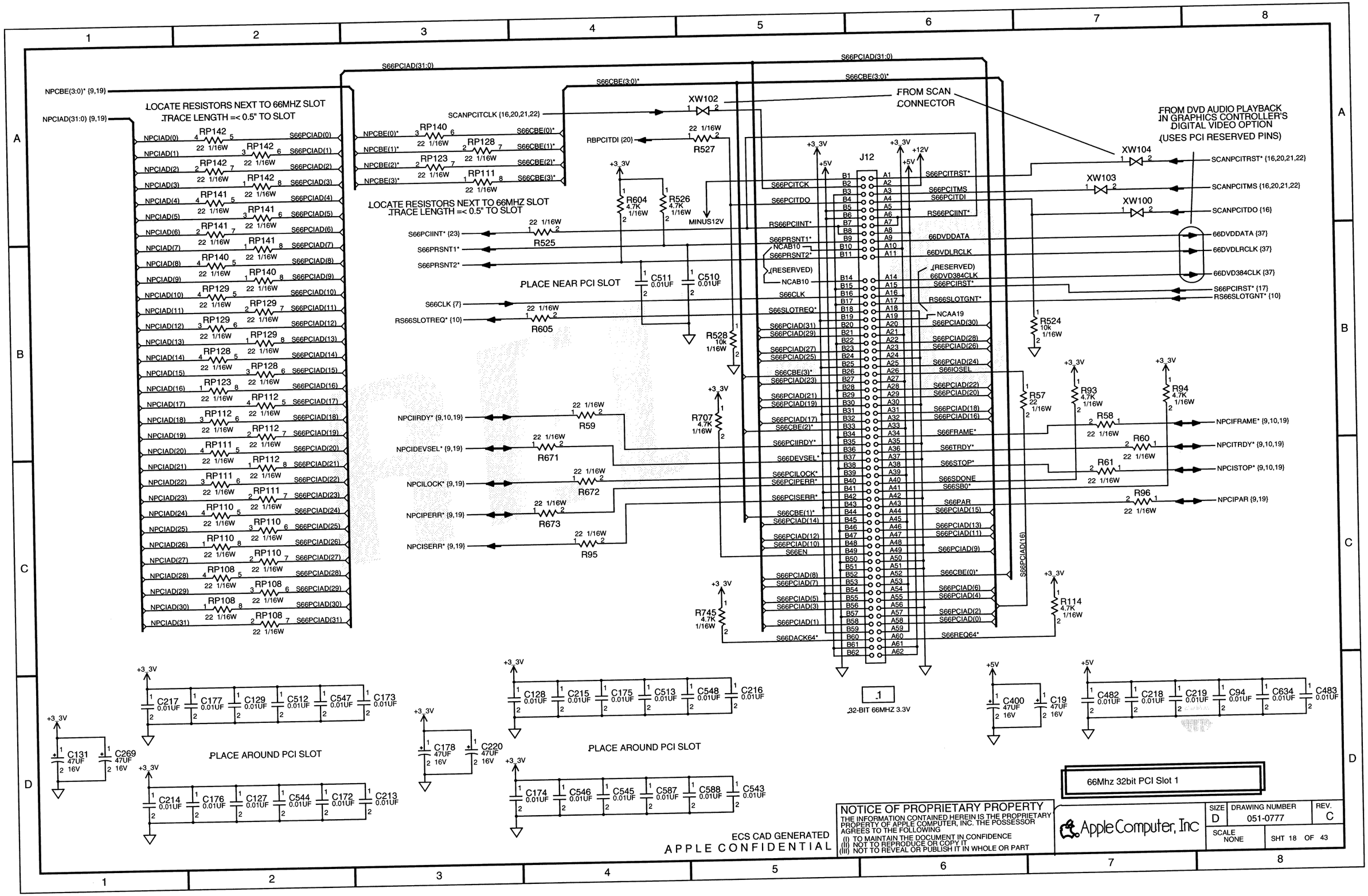
LOCATE RESISTORS NEXT TO 66MHZ SLOT
TRACE LENGTH =< 0.5" TO SLOT
LOCATE RESISTORS NEXT TO 66MHZ SLOT
TRACE LENGTH =< 0.5" TO SLOT
PLACE NEAR PCI SLOT
PLACE AROUND PCI SLOT
PLACE AROUND PCI SLOT
FROM SCAN CONNECTOR
FROM DVD AUDIO PLAYBACK IN GRAPHICS CONTROLLER'S DIGITAL VIDEO OPTION (USES PCI RESERVED PINS)
J12
32-BIT 66MHZ 3.3V
66Mhz 32bit PCI Slot 1
NOTICE OF PROPRIETARY PROPERTY
THE INFORMATION CONTAINED HEREIN IS THE PROPRIETARY PROPERTY OF APPLE COMPUTER, INC. THE POSSESSOR AGREES TO THE FOLLOWING
(I) TO MAINTAIN THE DOCUMENT IN CONFIDENCE
(II) NOT TO REPRODUCE OR COPY IT
(III) NOT TO REVEAL OR PUBLISH IT IN WHOLE OR PART
Apple Computer, Inc
SIZE D
DRAWING NUMBER 051-0777
REV. C
SCALE NONE
SHT 18 OF 43
ECS CAD GENERATED
APPLE CONFIDENTIAL

PRIMARY 32-BIT 66MHZ BUS
RESISTORS =< 0.5" FROM BRIDGE
LOCATE RESISTORS NEAR BRIDGE

TOTAL TRACE LENGTH =< 5.5"

SECONDARY 33MHZ 64-BIT BUS

U22
DEC21154

PCI 66Mhz 32bit to 33Mhz 64bit Bridge (DEC 21154)

NOTICE OF PROPRIETARY PROPERTY
THE INFORMATION CONTAINED HEREIN IS THE PROPRIETARY PROPERTY OF APPLE COMPUTER, INC. THE POSSESSOR AGREES TO THE FOLLOWING
(I) TO MAINTAIN THE DOCUMENT IN CONFIDENCE
(II) NOT TO REPRODUCE OR COPY IT
(III) NOT TO REVEAL OR PUBLISH IT IN WHOLE OR PART

Apple Computer, Inc

SIZE	DRAWING NUMBER	REV.
E	051-0777	C
SCALE NONE	SHT 19 OF 43	

ECS CAD GENERATED
APPLE CONFIDENTIAL

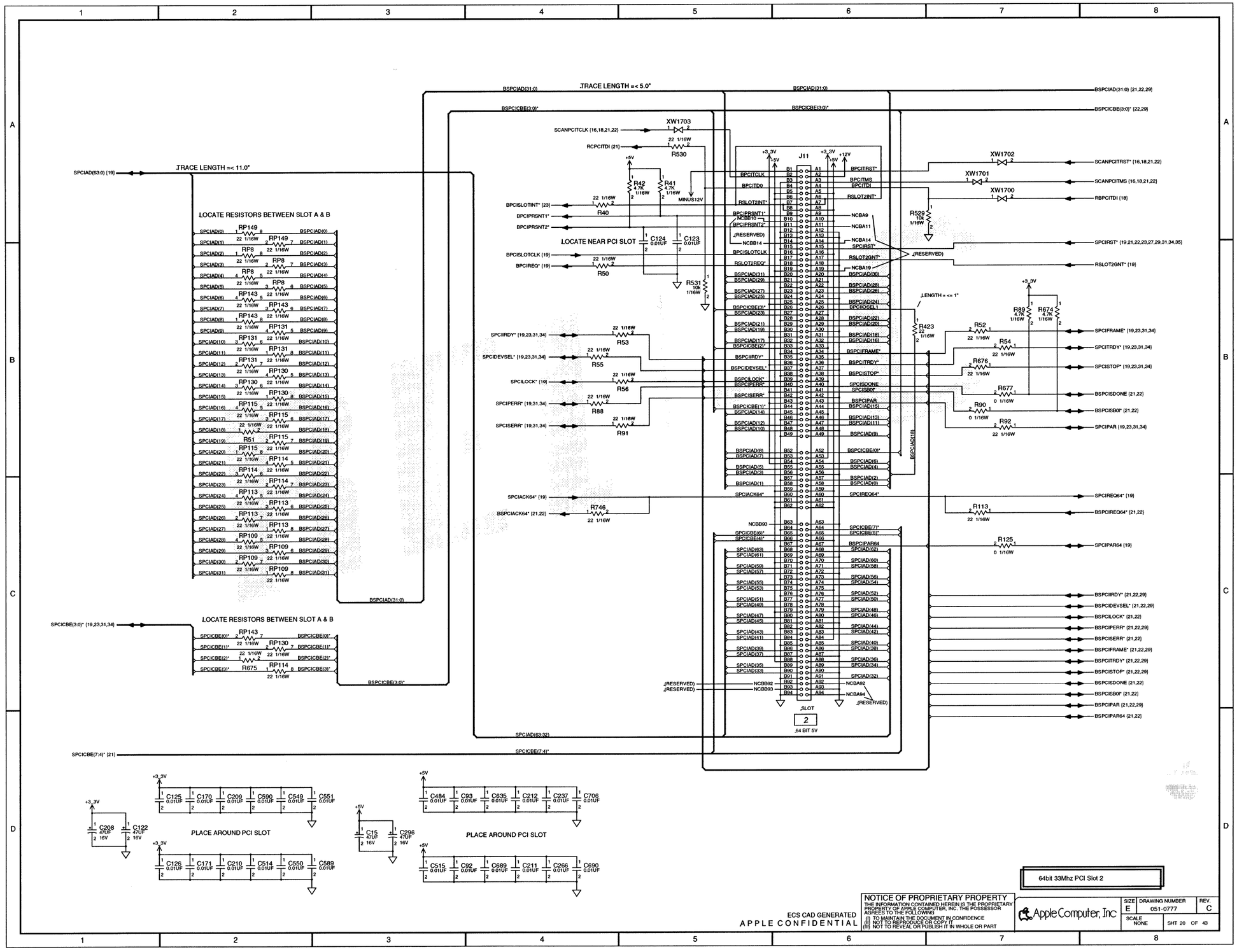
TRACE LENGTH =< 5.0"
TRACE LENGTH =< 11.0"
LOCATE RESISTORS BETWEEN SLOT A & B
LOCATE NEAR PCI SLOT
J11
SLOT
2
64 BIT 5V
LENGTH = <= 1"
PLACE AROUND PCI SLOT
PLACE AROUND PCI SLOT
64bit 33Mhz PCI Slot 2
NOTICE OF PROPRIETARY PROPERTY
THE INFORMATION CONTAINED HEREIN IS THE PROPRIETARY PROPERTY OF APPLE COMPUTER, INC. THE POSSESSOR AGREES TO THE FOLLOWING
(I) TO MAINTAIN THE DOCUMENT IN CONFIDENCE
(II) NOT TO REPRODUCE OR COPY IT
(III) NOT TO REVEAL OR PUBLISH IT IN WHOLE OR PART
ECS CAD GENERATED
APPLE CONFIDENTIAL
Apple Computer, Inc
SIZE E
DRAWING NUMBER 051-0777
REV. C
SCALE NONE
SHT 20 OF 43

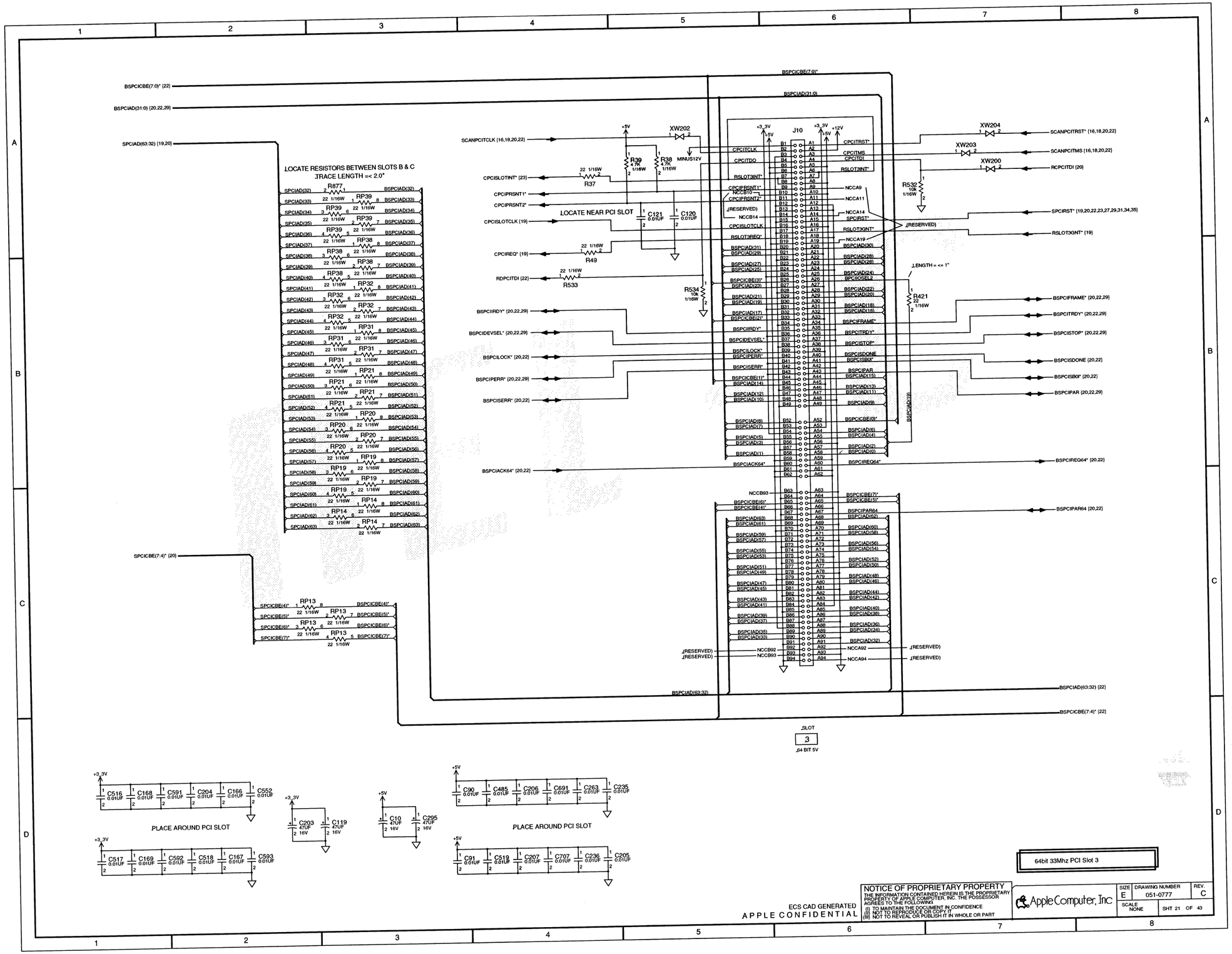
BSPCICBE(7:0)* [22]
BSPCIAD(31:0) [20,22,29]
SPCIAD(63:32) [19,20]
LOCATE RESISTORS BETWEEN SLOTS B & C
TRACE LENGTH =< 2.0"
LOCATE NEAR PCI SLOT
SCANPCITCLK [16,18,20,22]
CPCISLOTINT* [23]
CPCIPRSNT1*
CPCIPRSNT2*
CPCISLOTCLK [19]
CPCIREQ* [19]
RDPCITDI [22]
BSPCIIRDY* [20,22,29]
BSPCIDEVSEL* [20,22,29]
BSPCILOCK* [20,22]
BSPCIPERR* [20,22,29]
BSPCISERR* [20,22]
BSPCIACK64* [20,22]
SPCICBE(7:4)* [20]
MINUS12V
J10
SCANPCITRST* [16,18,20,22]
SCANPCITMS [16,18,20,22]
RCPCITDI [20]
SPCIRST* [19,20,22,23,27,29,31,34,35]
RSLOT3GNT* [19]
BSPCIFRAME* [20,22,29]
BSPCITRDY* [20,22,29]
BSPCISTOP* [20,22,29]
BSPCISDONE [20,22]
BSPCISB0* [20,22]
BSPCIPAR [20,22,29]
BSPCIREQ64* [20,22]
BSPCIPAR64 [20,22]
BSPCIAD(63:32) [22]
BSPCICBE(7:4)* [22]
LENGTH = <= 1"
SLOT
3
64 BIT 5V
PLACE AROUND PCI SLOT
PLACE AROUND PCI SLOT
64bit 33Mhz PCI Slot 3
NOTICE OF PROPRIETARY PROPERTY
THE INFORMATION CONTAINED HEREIN IS THE PROPRIETARY PROPERTY OF APPLE COMPUTER, INC. THE POSSESSOR AGREES TO THE FOLLOWING
(I) TO MAINTAIN THE DOCUMENT IN CONFIDENCE
(II) NOT TO REPRODUCE OR COPY IT
(III) NOT TO REVEAL OR PUBLISH IT IN WHOLE OR PART
ECS CAD GENERATED
APPLE CONFIDENTIAL
Apple Computer, Inc
SIZE E
DRAWING NUMBER 051-0777
REV. C
SCALE NONE
SHT 21 OF 43

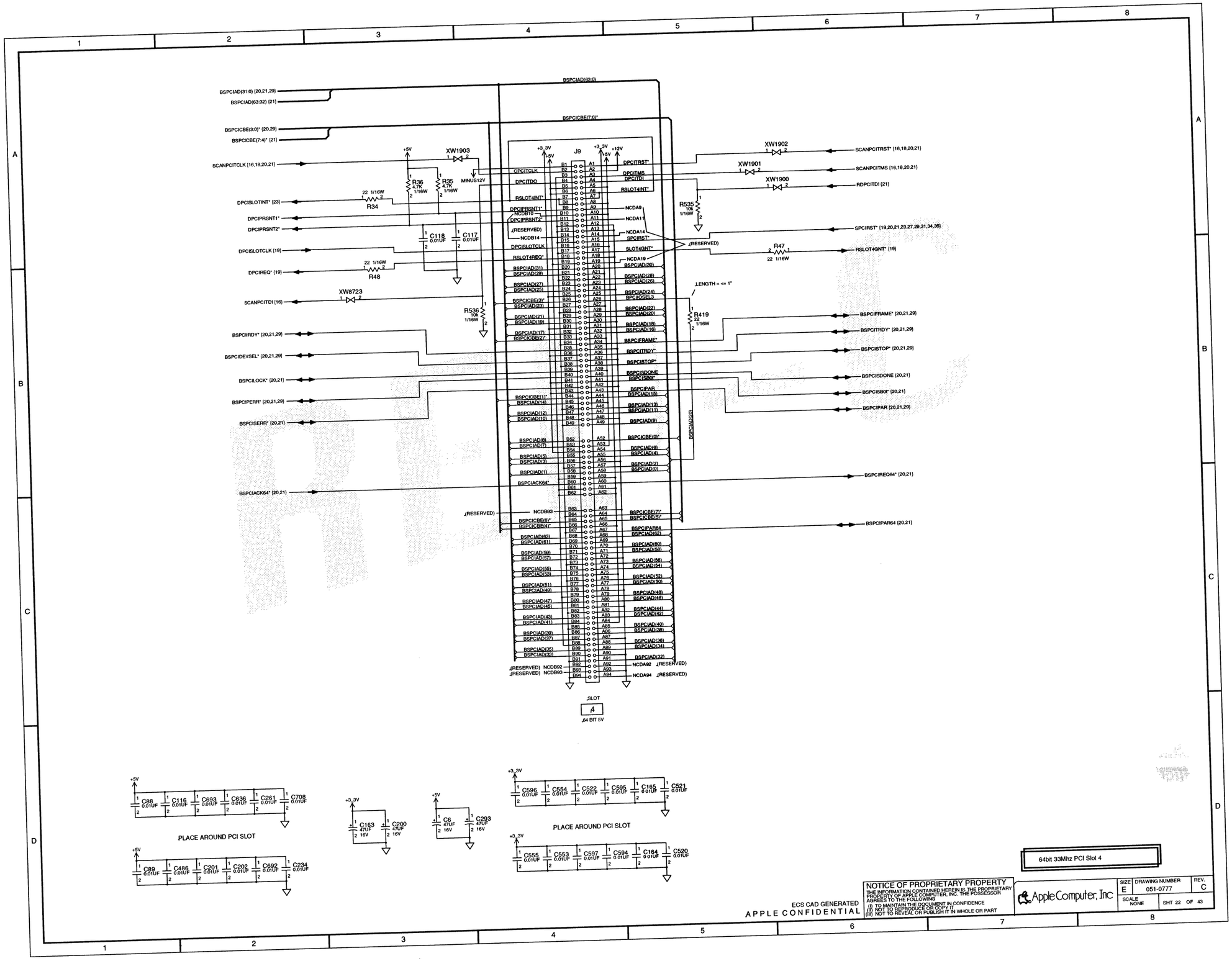
J9
SLOT
4
64 BIT 5V
PLACE AROUND PCI SLOT
PLACE AROUND PCI SLOT
64bit 33Mhz PCI Slot 4
ECS CAD GENERATED
APPLE CONFIDENTIAL
NOTICE OF PROPRIETARY PROPERTY
THE INFORMATION CONTAINED HEREIN IS THE PROPRIETARY PROPERTY OF APPLE COMPUTER, INC. THE POSSESSOR AGREES TO THE FOLLOWING
(I) TO MAINTAIN THE DOCUMENT IN CONFIDENCE
(II) NOT TO REPRODUCE OR COPY IT
(III) NOT TO REVEAL OR PUBLISH IT IN WHOLE OR PART
Apple Computer, Inc
SIZE E
DRAWING NUMBER 051-0777
REV. C
SCALE NONE
SHT 22 OF 43

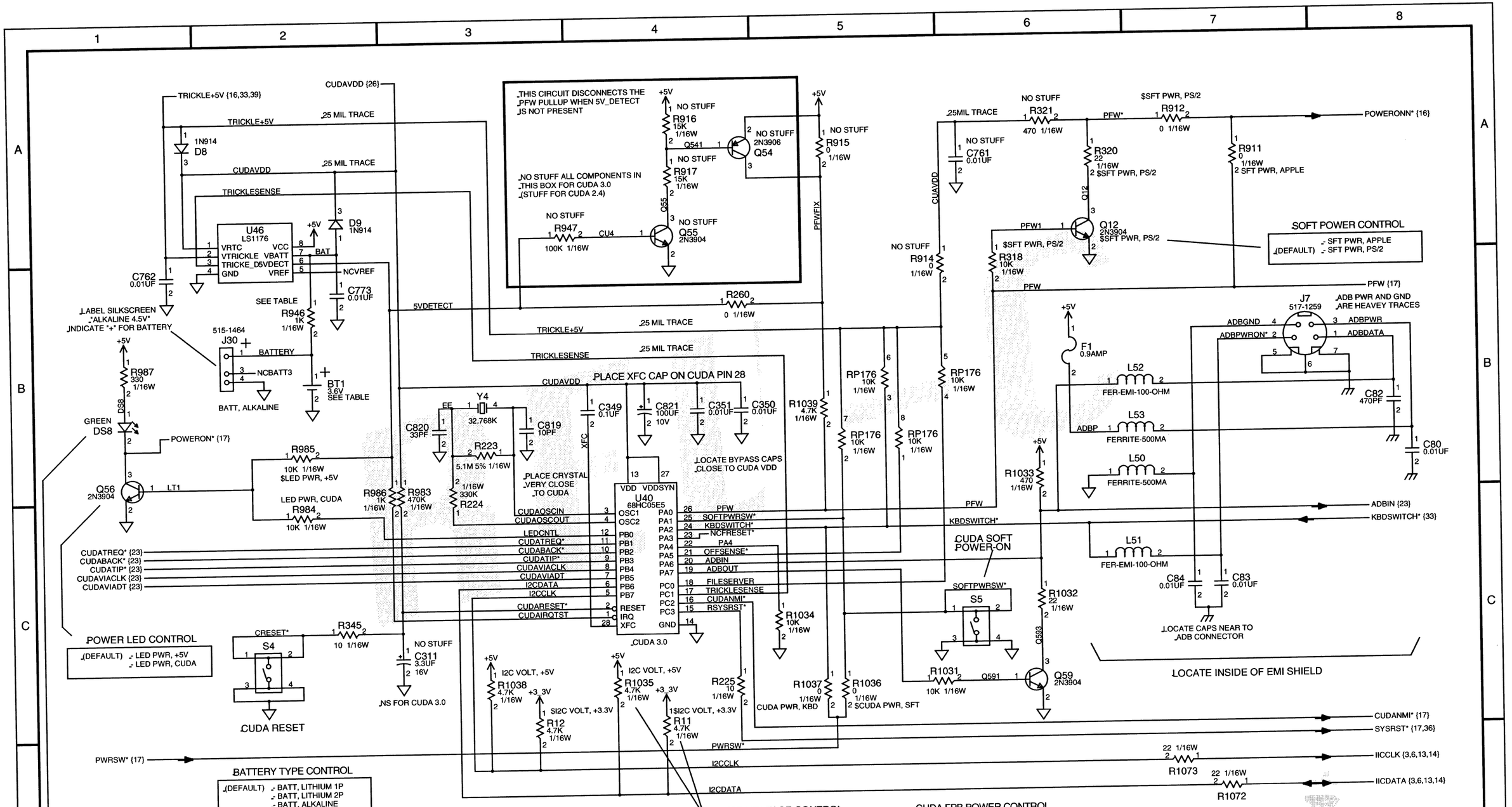

PART NUMBER	QTY	DESCRIPTION	ASSOCIATED REFERENCE DESIGNATORS	BOM OPTION
742-0029	1	BATTERY, LITHIUM, 3.6V	BT1	$BATT, LITHIUM 1P
525-0057	1	LITH, BAT HOLDER, 1P	BT1	$BATT, LITHIUM 1P
113S1103	1	RES, FF, 1K OHM, 5%, 1/16W	R946	$BATT, LITHIUM 1P
742-0029	1	BATTERY, LITHIUM, 3.6V	BT1	BATT, LITHIUM 2P
520-0344	1	LITH, BAT HOLDER, TOP	BT1	BATT, LITHIUM 2P
525-0055	1	LITH, BAT HOLDER, BOTTOM	BT1	BATT, LITHIUM 2P
113S1103	1	RES, FF, 1K OHM, 5%, 1/16W	R946	BATT, LITHIUM 2P
113S1000	1	RES, FF, 0 OHM, 5%, 1/16W	R946	BATT, ALKALINE

ECS CAD GENERATED
APPLE CONFIDENTIAL

NOTICE OF PROPRIETARY PROPERTY
THE INFORMATION CONTAINED HEREIN IS THE PROPRIETARY PROPERTY OF APPLE COMPUTER, INC. THE POSSESSOR AGREES TO THE FOLLOWING
(I) TO MAINTAIN THE DOCUMENT IN CONFIDENCE
(II) NOT TO REPRODUCE OR COPY IT
(III) NOT TO REVEAL OR PUBLISH IT IN WHOLE OR PART

Apple Computer, Inc

SIZE	DRAWING NUMBER	REV.
D	051-0777	C
SCALE NONE	SHT 24 OF 43	

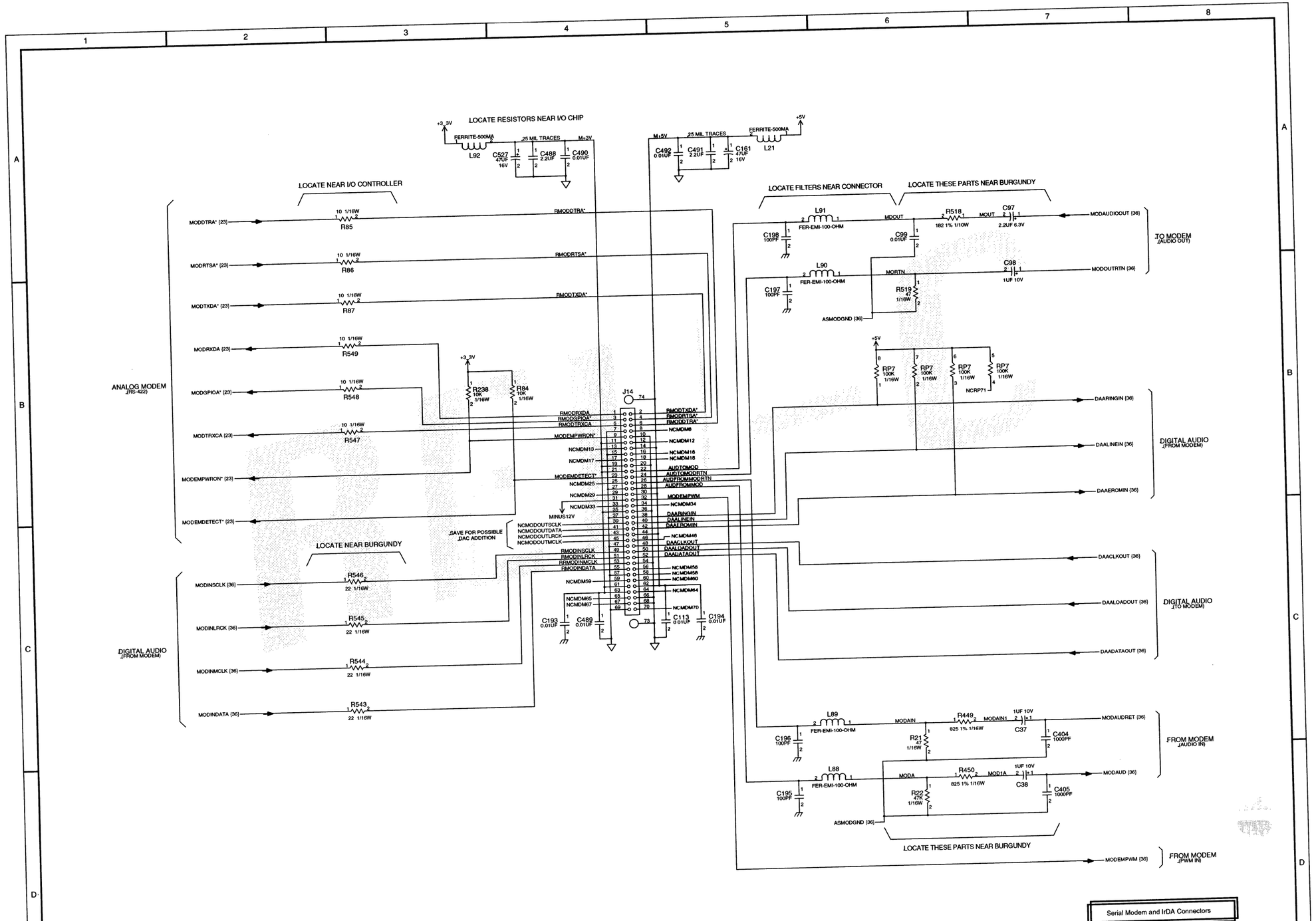

Serial Modem and IrDA Connectors

APPLE CONFIDENTIAL

ECS CAD GENERATED

NOTICE OF PROPRIETARY PROPERTY
THE INFORMATION CONTAINED HEREIN IS THE PROPRIETARY PROPERTY OF APPLE COMPUTER, INC. THE POSSESSOR AGREES TO THE FOLLOWING
(I) TO MAINTAIN THE DOCUMENT IN CONFIDENCE
(II) NOT TO REPRODUCE OR COPY IT
(III) NOT TO REVEAL OR PUBLISH IT IN WHOLE OR PART

Apple Computer, Inc

SIZE	DRAWING NUMBER	REV.
E	051-0777	C
SCALE NONE	SHT 25 OF 43	

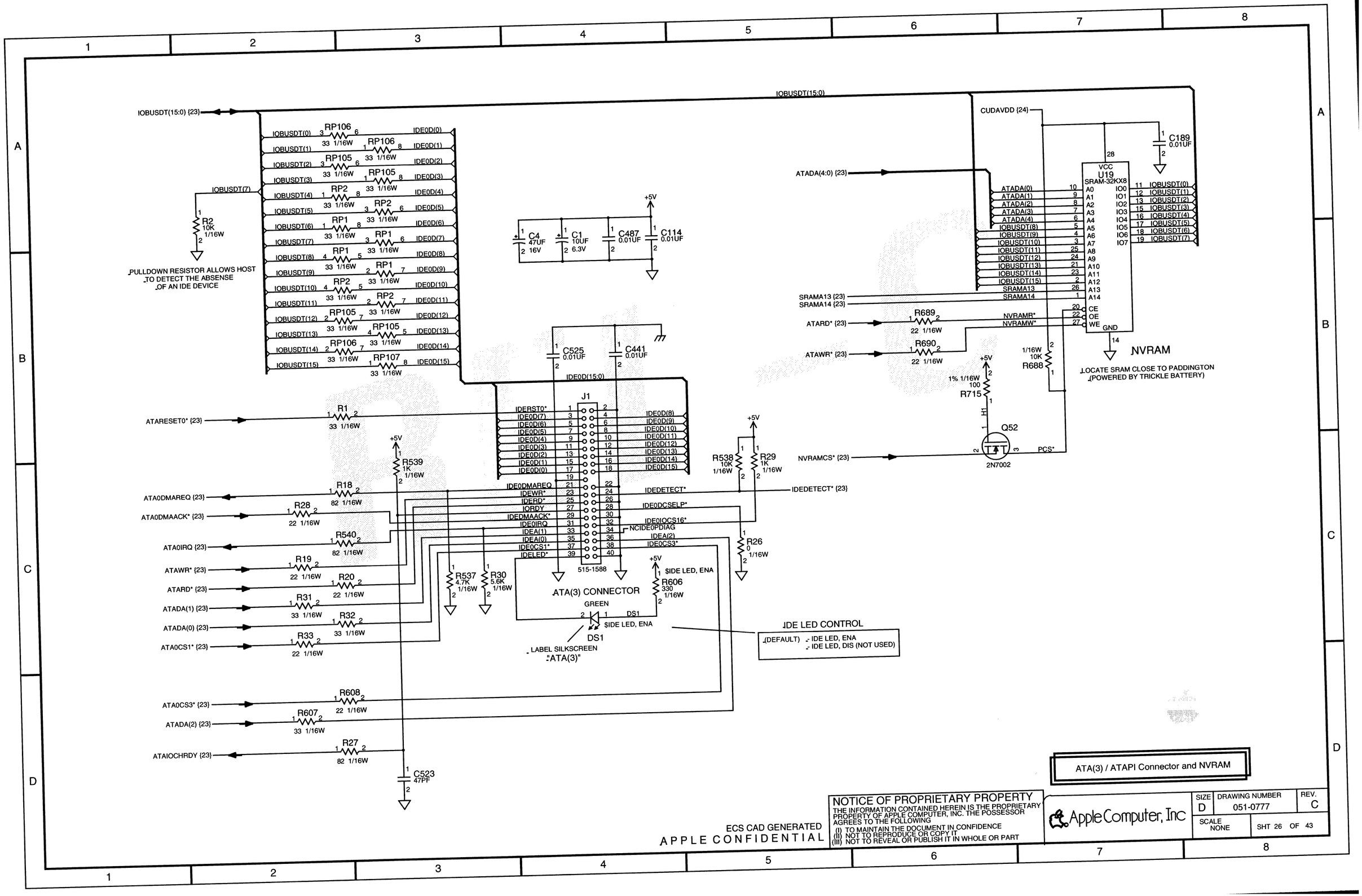
IOBUSDT(15:0) {23}
IOBUSDT(15:0)
IOBUSDT(7)
R2 10K 1/16W
PULLDOWN RESISTOR ALLOWS HOST
TO DETECT THE ABSENSE
OF AN IDE DEVICE
RP106 33 1/16W
RP105 33 1/16W
RP2 33 1/16W
RP1 33 1/16W
RP107 33 1/16W
IOBUSDT(0) IDE0D(0)
IOBUSDT(1) IDE0D(1)
IOBUSDT(2) IDE0D(2)
IOBUSDT(3) IDE0D(3)
IOBUSDT(4) IDE0D(4)
IOBUSDT(5) IDE0D(5)
IOBUSDT(6) IDE0D(6)
IOBUSDT(7) IDE0D(7)
IOBUSDT(8) IDE0D(8)
IOBUSDT(9) IDE0D(9)
IOBUSDT(10) IDE0D(10)
IOBUSDT(11) IDE0D(11)
IOBUSDT(12) IDE0D(12)
IOBUSDT(13) IDE0D(13)
IOBUSDT(14) IDE0D(14)
IOBUSDT(15) IDE0D(15)
+5V
C4 47UF 16V
C1 10UF 6.3V
C487 0.01UF
C114 0.01UF
C525 0.01UF
C441 0.01UF
IDE0D(15:0)
J1
515-1588
ATA(3) CONNECTOR
GREEN
DS1
$IDE LED, ENA
LABEL SILKSCREEN
"ATA(3)"
IDE LED CONTROL
(DEFAULT) - IDE LED, ENA
- IDE LED, DIS (NOT USED)
ATARESET0* {23}
R1 33 1/16W
ATA0DMAREQ {23}
R18 82 1/16W
ATA0DMAACK* {23}
R28 22 1/16W
ATA0IRQ {23}
R540 82 1/16W
ATAWR* {23}
R19 22 1/16W
ATARD* {23}
R20 22 1/16W
ATADA(1) {23}
R31 33 1/16W
ATADA(0) {23}
R32 33 1/16W
ATA0CS1* {23}
R33 22 1/16W
ATA0CS3* {23}
R608 22 1/16W
ATADA(2) {23}
R607 33 1/16W
ATAIOCHRDY {23}
R27 82 1/16W
R539 1K 1/16W
R537 4.7K 1/16W
R30 5.6K 1/16W
C523 47PF
IDERST0*
IDE0D(7)
IDE0D(6)
IDE0D(5)
IDE0D(4)
IDE0D(3)
IDE0D(2)
IDE0D(1)
IDE0D(0)
IDE0DMAREQ
IDEWR*
IDERD*
IORDY
IDEDMAACK*
IDE0IRQ
IDEA(1)
IDEA(0)
IDE0CS1*
IDELED*
IDE0D(8)
IDE0D(9)
IDE0D(10)
IDE0D(11)
IDE0D(12)
IDE0D(13)
IDE0D(14)
IDE0D(15)
IDEDETECT*
IDE0DCSELP*
IDE0IOCS16*
NCIDE0PDIAG
IDEA(2)
IDE0CS3*
R538 10K 1/16W
R29 1K 1/16W
R26 0 1/16W
IDEDETECT* {23}
CUDAVDD {24}
C189 0.01UF
ATADA(4:0) {23}
VCC
U19
SRAM-32KX8
ATADA(0)
ATADA(1)
ATADA(2)
ATADA(3)
ATADA(4)
IOBUSDT(8)
IOBUSDT(9)
IOBUSDT(10)
IOBUSDT(11)
IOBUSDT(12)
IOBUSDT(13)
IOBUSDT(14)
IOBUSDT(15)
SRAMA13
SRAMA14
A0 A1 A2 A3 A4 A5 A6 A7 A8 A9 A10 A11 A12 A13 A14
IO0 IO1 IO2 IO3 IO4 IO5 IO6 IO7
CE OE WE GND
SRAMA13 {23}
SRAMA14 {23}
ATARD* {23}
R689 22 1/16W
ATAWR* {23}
R690 22 1/16W
NVRAMR*
NVRAMW*
R688 10K 1/16W
NVRAM
LOCATE SRAM CLOSE TO PADDINGTON
(POWERED BY TRICKLE BATTERY)
R715 100 1% 1/16W
Q52
2N7002
NVRAMCS* {23}
PCS*
ATA(3) / ATAPI Connector and NVRAM
NOTICE OF PROPRIETARY PROPERTY
THE INFORMATION CONTAINED HEREIN IS THE PROPRIETARY PROPERTY OF APPLE COMPUTER, INC. THE POSSESSOR AGREES TO THE FOLLOWING
(I) TO MAINTAIN THE DOCUMENT IN CONFIDENCE
(II) NOT TO REPRODUCE OR COPY IT
(III) NOT TO REVEAL OR PUBLISH IT IN WHOLE OR PART
ECS CAD GENERATED
APPLE CONFIDENTIAL
Apple Computer, Inc
SIZE D
DRAWING NUMBER 051-0777
REV. C
SCALE NONE
SHT 26 OF 43

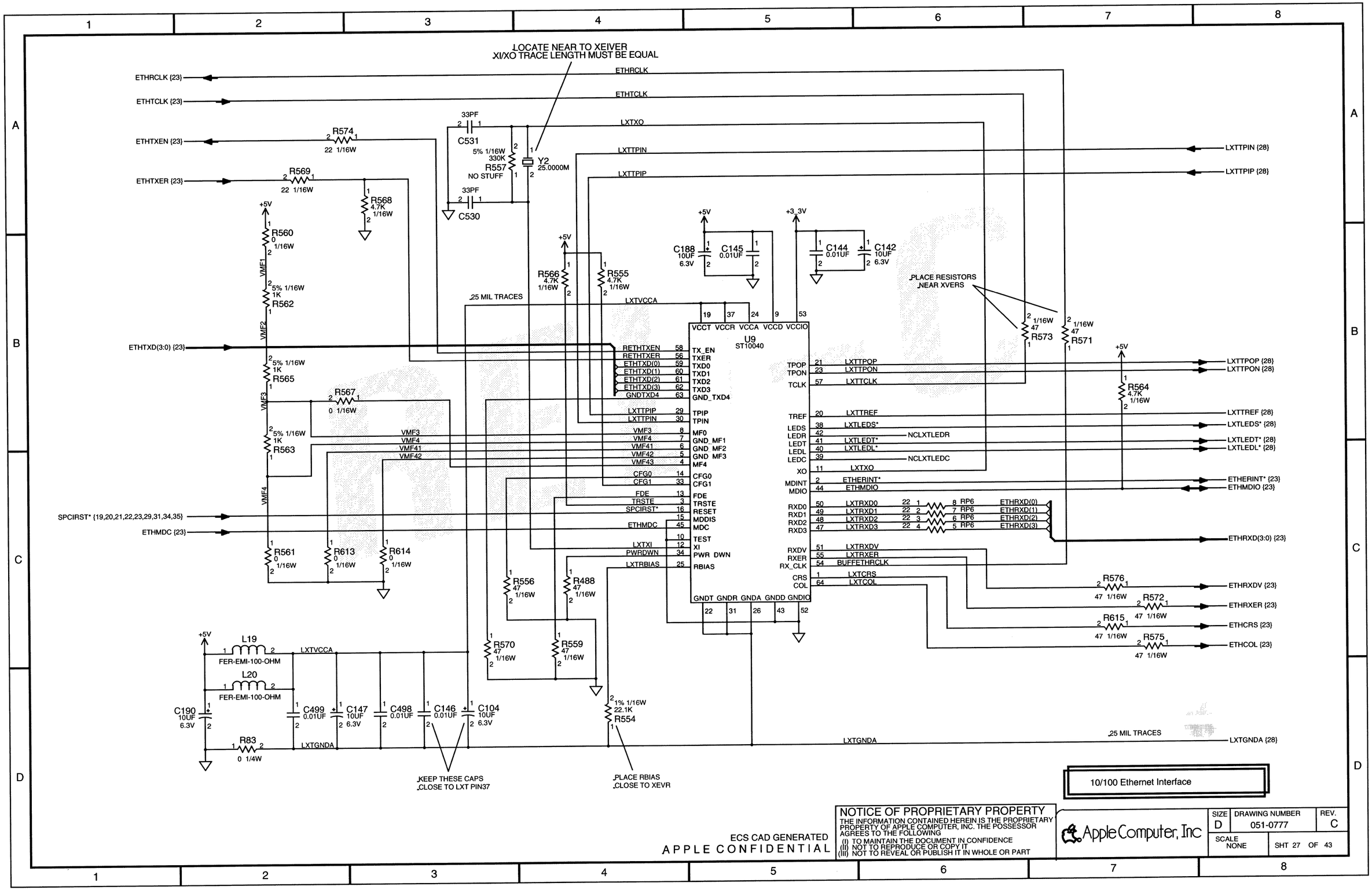
LOCATE NEAR TO XEIVER
XI/XO TRACE LENGTH MUST BE EQUAL
ETHRCLK {23}
ETHTCLK {23}
ETHTXEN {23}
ETHTXER {23}
ETHTXD(3:0) {23}
SPCIRST* {19,20,21,22,23,29,31,34,35}
ETHMDC {23}
LXTTPIN {28}
LXTTPIP {28}
LXTTPOP {28}
LXTTPON {28}
LXTTREF {28}
LXTLEDS* {28}
LXTLEDT* {28}
LXTLEDL* {28}
ETHERINT* {23}
ETHMDIO {23}
ETHRXD(3:0) {23}
ETHRXDV {23}
ETHRXER {23}
ETHCRS {23}
ETHCOL {23}
LXTGNDA {28}
R574 22 1/16W
R569 22 1/16W
R568 4.7K 1/16W
R560 0 1/16W
R562 5% 1/16W 1K
R565 5% 1/16W 1K
R567 0 1/16W
R563 5% 1/16W 1K
R561 0 1/16W
R613 0 1/16W
R614 0 1/16W
C531 33PF
C530 33PF
R557 330K 5% 1/16W NO STUFF
Y2 25.0000M
R566 4.7K 1/16W
R555 4.7K 1/16W
C188 10UF 6.3V
C145 0.01UF
C144 0.01UF
C142 10UF 6.3V
.25 MIL TRACES
LXTVCCA
PLACE RESISTORS NEAR XVERS
R573 47 1/16W
R571 47 1/16W
R564 4.7K 1/16W
U9
ST10040
VCCT VCCR VCCA VCCD VCCIO
TX_EN
TXER
TXD0
TXD1
TXD2
TXD3
GND_TXD4
TPIP
TPIN
MF0
GND_MF1
GND_MF2
GND_MF3
MF4
CFG0
CFG1
FDE
TRSTE
RESET
MDDIS
MDC
TEST
XI
PWR_DWN
RBIAS
TPOP
TPON
TCLK
TREF
LEDS
LEDR
LEDT
LEDL
LEDC
XO
MDINT
MDIO
RXD0
RXD1
RXD2
RXD3
RXDV
RXER
RX_CLK
CRS
COL
GNDT GNDR GNDA GNDD GNDIO
NCLXTLEDR
NCLXTLEDC
RP6
R556 47 1/16W
R488 47 1/16W
R570 47 1/16W
R559 47 1/16W
R576 47 1/16W
R572 47 1/16W
R615 47 1/16W
R575 47 1/16W
L19 FER-EMI-100-OHM
L20 FER-EMI-100-OHM
C190 10UF 6.3V
C499 0.01UF
C147 10UF 6.3V
C498 0.01UF
C146 0.01UF
C104 10UF 6.3V
R83 0 1/4W
R554 1% 1/16W 22.1K
KEEP THESE CAPS CLOSE TO LXT PIN37
PLACE RBIAS CLOSE TO XEVR
10/100 Ethernet Interface
NOTICE OF PROPRIETARY PROPERTY
THE INFORMATION CONTAINED HEREIN IS THE PROPRIETARY PROPERTY OF APPLE COMPUTER, INC. THE POSSESSOR AGREES TO THE FOLLOWING
(I) TO MAINTAIN THE DOCUMENT IN CONFIDENCE
(II) NOT TO REPRODUCE OR COPY IT
(III) NOT TO REVEAL OR PUBLISH IT IN WHOLE OR PART
ECS CAD GENERATED
APPLE CONFIDENTIAL
Apple Computer, Inc
SIZE D
DRAWING NUMBER 051-0777
REV. C
SCALE NONE
SHT 27 OF 43

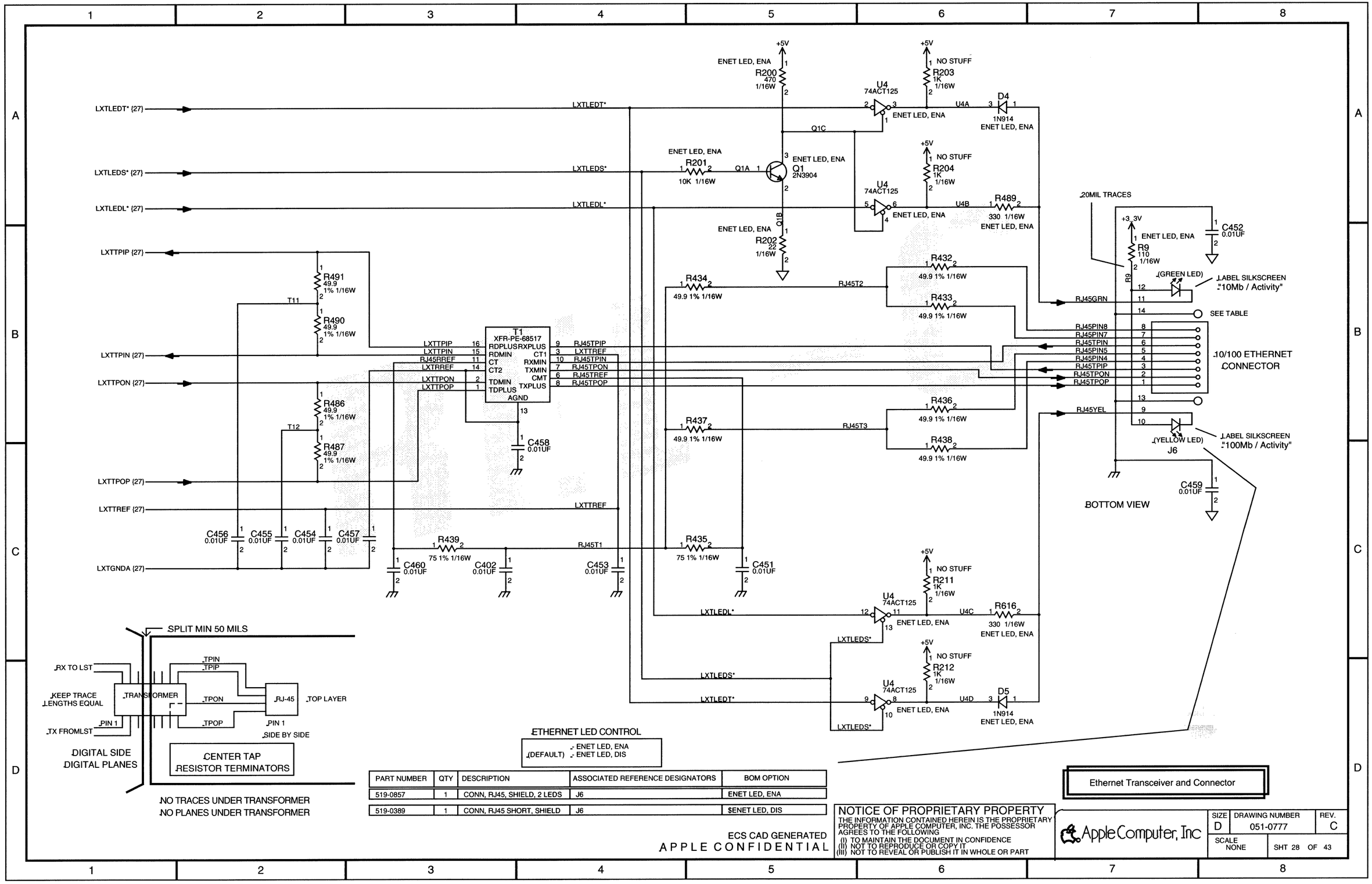

PART NUMBER	QTY	DESCRIPTION	ASSOCIATED REFERENCE DESIGNATORS	BOM OPTION
519-0857	1	CONN, RJ45, SHIELD, 2 LEDS	J6	ENET LED, ENA
519-0389	1	CONN, RJ45 SHORT, SHIELD	J6	$ENET LED, DIS

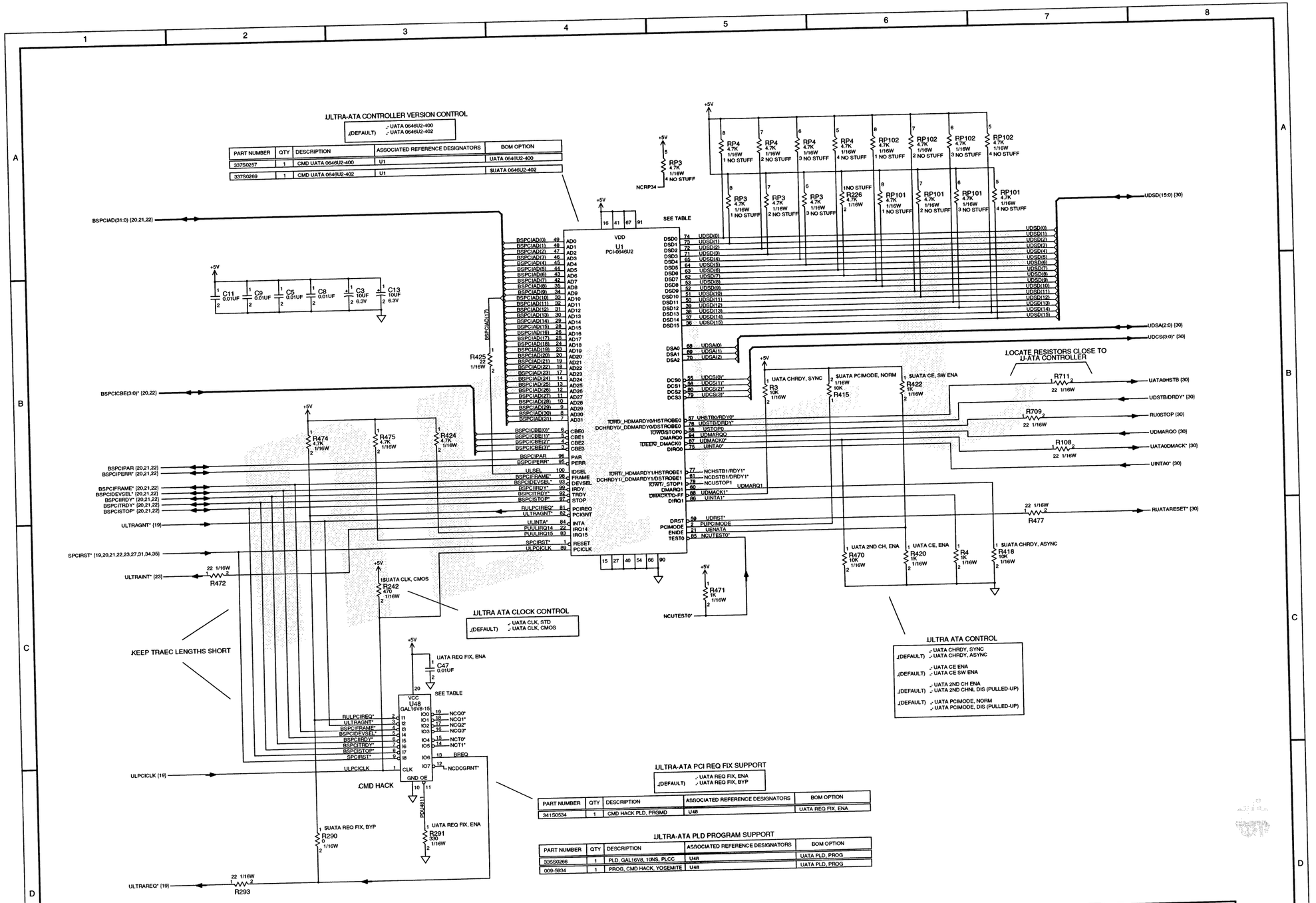

PART NUMBER	QTY	DESCRIPTION	ASSOCIATED REFERENCE DESIGNATORS	BOM OPTION
337S0257	1	CMD UATA 0646U2-400	U1	UATA 0646U2-400
337S0269	1	CMD UATA 0646U2-402	U1	SUATA 0646U2-402

PART NUMBER	QTY	DESCRIPTION	ASSOCIATED REFERENCE DESIGNATORS	BOM OPTION
341S0534	1	CMD HACK PLD, PRGMD	U48	UATA REQ FIX, ENA

PART NUMBER	QTY	DESCRIPTION	ASSOCIATED REFERENCE DESIGNATORS	BOM OPTION
33S50266	1	PLD, GAL16V8, 10NS, PLCC	U48	UATA PLD, PROG
009-5934	1	PROG, CMD HACK, YOSEMITE	U48	UATA PLD, PROG

NOTICE OF PROPRIETARY PROPERTY
THE INFORMATION CONTAINED HEREIN IS THE PROPRIETARY PROPERTY OF APPLE COMPUTER, INC. THE POSSESSOR AGREES TO THE FOLLOWING
(I) TO MAINTAIN THE DOCUMENT IN CONFIDENCE
(II) NOT TO REPRODUCE OR COPY IT
(III) NOT TO REVEAL OR PUBLISH IT IN WHOLE OR PART

ECS CAD GENERATED
APPLE CONFIDENTIAL

Apple Computer, Inc

SIZE	DRAWING NUMBER	REV.
E	051-0777	C
SCALE NONE	SHT 29 OF 43	

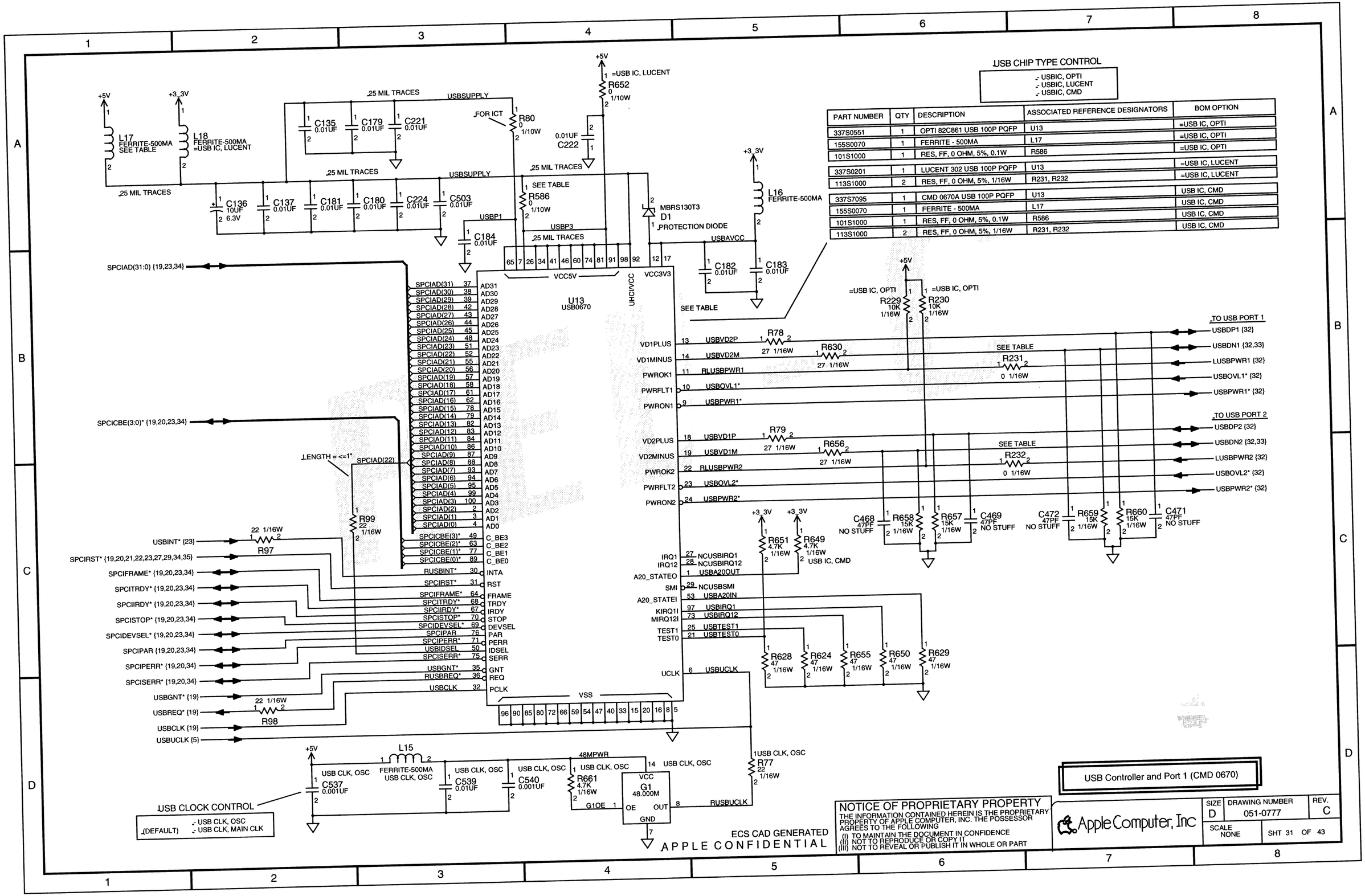

PART NUMBER	QTY	DESCRIPTION	ASSOCIATED REFERENCE DESIGNATORS	BOM OPTION
337S0551	1	OPTI 82C861 USB 100P PQFP	U13	=USB IC, OPTI
155S0070	1	FERRITE - 500MA	L17	=USB IC, OPTI
101S1000	1	RES, FF, 0 OHM, 5%, 0.1W	R586	=USB IC, OPTI
337S0201	1	LUCENT 302 USB 100P PQFP	U13	=USB IC, LUCENT
113S1000	2	RES, FF, 0 OHM, 5%, 1/16W	R231, R232	=USB IC, LUCENT
337S7095	1	CMD 0670A USB 100P PQFP	U13	USB IC, CMD
155S0070	1	FERRITE - 500MA	L17	USB IC, CMD
101S1000	1	RES, FF, 0 OHM, 5%, 0.1W	R586	USB IC, CMD
113S1000	2	RES, FF, 0 OHM, 5%, 1/16W	R231, R232	USB IC, CMD

NOTICE OF PROPRIETARY PROPERTY
THE INFORMATION CONTAINED HEREIN IS THE PROPRIETARY PROPERTY OF APPLE COMPUTER, INC. THE POSSESSOR AGREES TO THE FOLLOWING
(I) TO MAINTAIN THE DOCUMENT IN CONFIDENCE
(II) NOT TO REPRODUCE OR COPY IT
(III) NOT TO REVEAL OR PUBLISH IT IN WHOLE OR PART

ECS CAD GENERATED
APPLE CONFIDENTIAL

Apple Computer, Inc

SIZE	DRAWING NUMBER	REV.
D	051-0777	C
SCALE NONE	SHT 31 OF 43	

REFERENCE DESIGNATIONS	
LAST USED	NOT USED
BT1	
C1702	C48-53 C72-79 C102-103 C138-141 C143 C185 C191-192 C223 C310 C312-313 C316 C326-328 C354-399 C406-409 C461-466 C477 C500-502 C508 C529 C533-536 C538 C598 C774-777 C797 C813 C815-816 C844 C846-851 C854-1042 C1050-1699
D10	
DS9	DS2-3
F7	F3 F5-6
G3	
J35	J16-17 J29 J32
L110	L3 L5 L36-49 L54-67 L99-100 L102-108
Q61	Q2-3 Q13-18 Q22-51 Q57-58
R1075	R292 R294-317 R319 R322-344 R346-399 R403-406 R417 R440-448 R465-466 R469 R473 R492-508 R550 R558 R577-579 R582-585 R587-590 R609-612 R617-623 R625-627 R631-634 R642-644 R648 R653-654 R693-694 R716 R718-719 R812-813 R898 R908 R942-945 R977 R988-991 R1027-1029 R1065-1068 R1070-1071
	RP58-60 RP64-99

LAST USED	NOT USED
RP176	RP133
S5	S1-3
T1	
U48	
VR3	
XS4302	XS1-3799 XS3803-3899 XS3901 XS3903-3904 XS3908 XS3921 XS3931-3999 XS4004-4299
XW8723	XW9-29 XW32-99 XW101 XW105-199 XW201 XW205-299 XW305-399 XW401-455 XW457-800 XW806-1599 XW1604-1699 XW1704-1899 XW1904-1998 XW2004-8722
Y4	Y1
ZH4300	ZH1 ZH4-6 ZH21-3799 ZH3801-3899 ZH3901-3999 ZH4001-4299

PLATED THROUGH HOLES

LOCATE THESE CAPS NEAR TO THE PLATED-THRU HOLES

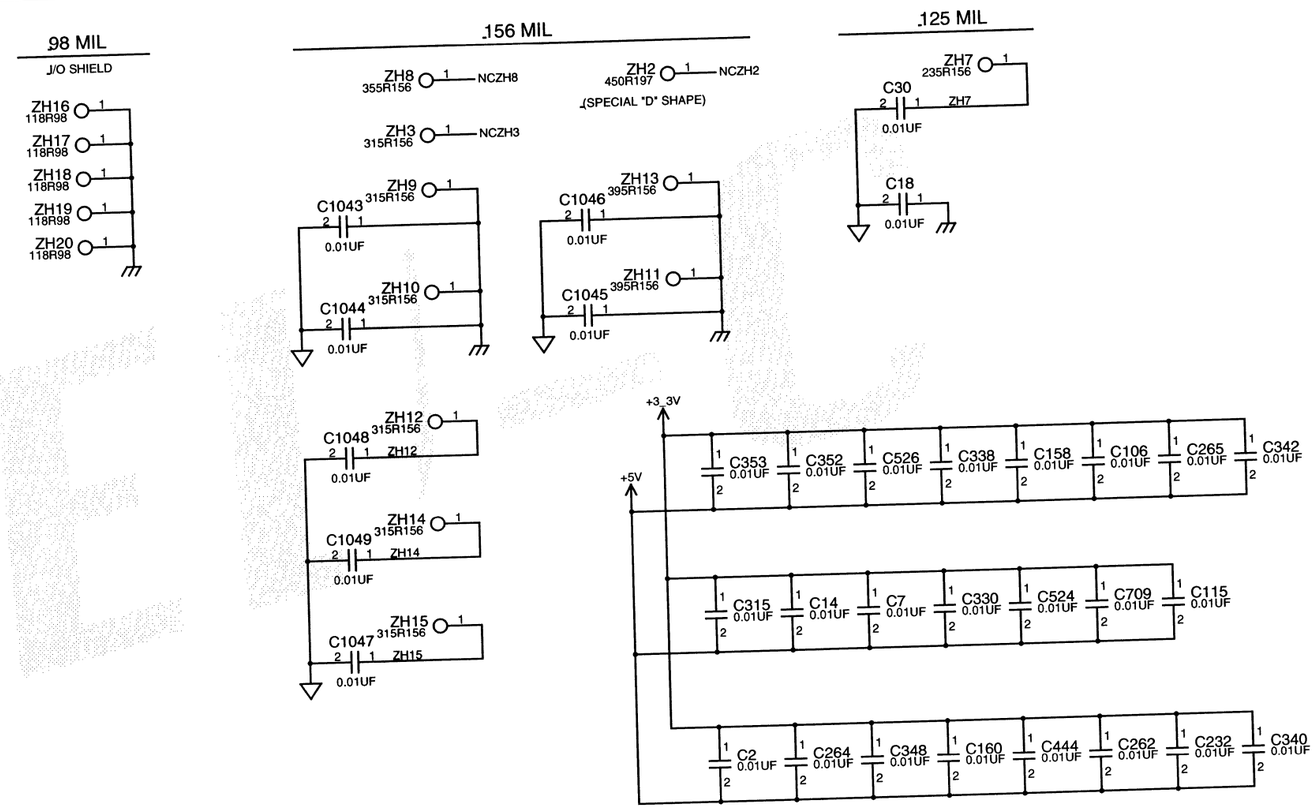

LOCATE AROUND +3.3V
TO +5V PLANE SPLIT

GLOBAL NETS	
NET NAME	PAGE
GND	3,4,5,6,7,8,9,10,11,12,13,14,15,16,17,18,19,20,21,22,23,24,25,26,27,28,29,30,31,32,33,34,35,36,37,39,40,41
CHASSIS	16,17,24,25,26,28,30,32,35,37,38,39,40,41
MINUS5V	36,38,39
MINUS12V	16,18,20,21,22,25,36,39
+3_3V	3,5,6,7,9,10,11,12,13,14,15,16,17,18,19,20,21,22,23,24,25,27,28,31,34,35,41
+5V	3,4,8,10,15,16,17,18,19,20,21,22,23,24,25,26,27,28,29,30,31,32,33,34,35,38,40,41
+12V	4,15,16,18,20,21,22,36

Caps, Plated holes & Reference Info

ECS CAD GENERATED
APPLE CONFIDENTIAL

NOTICE OF PROPRIETARY PROPERTY
THE INFORMATION CONTAINED HEREIN IS THE PROPRIETARY PROPERTY OF APPLE COMPUTER, INC. THE POSSESSOR AGREES TO THE FOLLOWING
(I) TO MAINTAIN THE DOCUMENT IN CONFIDENCE
(II) NOT TO REPRODUCE OR COPY IT
(III) NOT TO REVEAL OR PUBLISH IT IN WHOLE OR PART

Apple Computer, Inc

SIZE	DRAWING NUMBER	REV.
D	051-0777	C
SCALE NONE	SHT 41 OF 43	

REFERENCE DESIGNATOR LOCATIONS

BT1	24-B2
C1	26-B4
C2	41-C6
C3	29-B3
C4	26-B4
C5	29-B2
C6	22-D3
C7	41-C6
C8	29-B2
C9	29-B2
C10	21-D3
C11	29-B2
C12	36-A7
C13	29-B3
C14	41-C6
C15	20-D3
C16	39-D6
C17	32-B2
C18	41-B6
C19	18-D7
C20	36-A4
C21	36-A4
C22	36-A4
C23	36-A4
C24	36-A5
C25	17-C5
C26	36-C7
C27	36-C7
C28	36-D7
C29	32-C3
C30	41-A6
C31	32-B5
C32	39-C7
C33	39-D7
C34	39-C7
C35	39-C7
C36	39-B1
C37	25-C7
C38	25-D7
C39	32-C5
C40	15-C3
C41	38-B4
C42	17-B4
C43	38-B4
C44	38-B4
C45	17-B4
C46	17-D7
C47	29-C3
C54	39-B4
C55	39-A4
C56	39-B4
C57	39-B4
C58	39-B4
C59	39-D6
C60	39-D6
C61	39-C6
C62	39-C6
C63	39-D6
C64	32-C7
C65	32-B7
C66	32-B6
C67	32-B6
C68	32-D6
C69	32-D6
C70	32-B6
C71	32-D6
C80	24-B8
C81	34-B8
C82	24-B8
C83	24-C7
C84	24-C7
C85	34-B8
C86	35-A4
C87	35-A6
C88	22-D1
C89	22-D1
C90	21-D3
C91	21-D3
C92	20-D3
C93	20-D3
C94	18-D8
C95	39-A1
C96	39-B1
C97	25-A7
C98	25-B7
C99	25-A6
C100	32-B5
C101	32-C5
C104	27-D3
C105	34-B1
C106	41-B7
C107	34-A1
C108	34-A1
C109	34-B1
C110	34-A2
C111	34-B7
C112	34-B7
C113	25-C5
C114	26-B4
C115	41-C7
C116	22-D1
C117	22-A3
C118	22-A3
C119	21-D3
C120	21-A5
C121	21-A5
C122	20-D1
C123	20-B5
C124	20-B5
C125	20-D1
C126	20-D1
C127	18-D2
C128	18-D3
C129	18-D2
C130	33-C3
C131	18-D1
C132	37-B5
C133	39-A2
C134	39-B2
C135	31-A2
C136	31-A2
C137	31-A2
C142	27-B6
C144	27-B5
C145	27-B5
C146	27-D3
C147	27-D2
C148	34-B1
C149	34-A2
C150	34-B2
C151	34-A2
C152	34-B2
C153	34-A2
C154	34-A2
C155	34-A2
C156	34-B1
C157	34-B2
C158	41-B7
C159	34-B7
C160	41-C6
C161	25-A5
C162	30-B8
C163	22-D3
C164	22-D5
C165	22-D5
C166	21-D2
C167	21-D2
C168	21-D1
C169	21-D1
C170	20-D2
C171	20-D2
C172	18-D2
C173	18-D3
C174	18-D3
C175	18-D4
C176	18-D2
C177	18-D2
C178	18-D3
C179	31-A3
C180	31-A3
C181	31-A2
C182	31-B5
C183	31-B5
C184	31-B3
C186	23-A2
C187	23-D6
C188	27-B5
C189	26-A7
C190	27-D2
C193	25-C4
C194	25-C5
C195	25-D5
C196	25-C5
C197	25-B5
C198	25-A5
C199	30-B7
C200	22-D3
C201	22-D2
C202	22-D2
C203	21-D2
C204	21-D2
C205	21-D4
C206	21-D4
C207	21-D4
C208	20-D1
C209	20-D2
C210	20-D2
C211	20-D4
C212	20-D4
C213	18-D3
C214	18-D1
C215	18-D4
C216	18-D5
C217	18-D1
C218	18-D7
C219	18-D7
C220	18-D3
C221	31-A3
C222	31-A4
C224	31-A3
C225	8-B4
C226	8-B3
C227	11-B5
C228	11-B5
C229	12-C5
C230	11-B6
C231	11-B5
C232	41-C7
C233	16-A3
C234	22-D2
C235	21-D4
C236	21-D4
C237	20-D4
C238	7-B2
C239	7-B2
C240	7-B2
C241	7-B2
C242	7-B1
C243	7-B4
C244	7-B4
C245	23-D7
C246	6-A4
C247	5-A4
C248	6-A3
C249	6-A2
C250	5-A6
C251	5-A6
C252	5-A7
C253	11-B2
C254	11-B2
C255	10-D5
C256	11-B2
C257	11-B2
C258	16-B3
C259	16-B3
C260	16-B4
C261	22-D2
C262	41-C7
C263	21-D4
C264	41-C6
C265	41-B7
C266	20-D4
C267	19-D5
C268	3-A6
C269	18-D1
C270	9-A3
C271	9-D5
C272	9-A6
C273	6-A5
C274	6-A5
C275	6-A1
C276	6-A2
C277	6-A5
C278	6-A3
C279	6-A2
C280	6-A2
C281	6-A1
C282	6-A5
C283	10-D5
C284	11-C2
C285	11-C2
C286	10-D5
C287	10-D5
C288	11-C2
C289	11-C2
C290	16-A4
C291	16-B4
C292	36-A5
C293	22-D3
C294	36-A5
C295	21-D3
C296	20-D3
C297	17-A6
C298	7-A4
C299	7-A4
C300	7-A6
C301	7-A3
C302	7-A4
C303	7-A5
C304	15-C5
C305	15-C5
C306	11-B5
C307	11-B5
C308	11-B6
C309	11-B5
C311	24-C3
C314	17-A7
C315	41-C6
C317	3-A6
C318	3-A4
C319	7-A7
C320	5-C5
C321	5-C5
C322	5-C4
C323	5-C4
C324	15-A4
C325	15-A4
C329	17-C6
C330	41-C6
C331	3-A6
C332	4-B7
C333	4-B7
C334	4-B7
C335	4-B7
C336	4-B5
C337	3-A7
C338	41-B6
C339	4-B3
C340	41-C8
C341	40-A4
C342	41-B8
C343	40-B4
C344	40-B5
C345	40-C6
C346	40-B5
C347	40-C5
C348	41-C6
C349	24-B4
C350	24-B4
C351	24-B4
C352	41-B6
C353	41-B6
C400	18-D6
C401	34-B3
C402	28-C3
C403	38-B2
C404	25-D7
C405	25-D7
C410	39-C7
C411	39-D7
C412	39-C7
C413	39-C7
C414	36-C2
C415	36-C3
C416	36-D2
C417	36-D3
C418	36-D3
C419	36-D3
C420	38-C7
C421	38-C7
C422	38-C7
C423	36-C4
C424	38-B7
C425	38-B7
C426	36-C3
C427	36-A4
C428	38-B7
C429	37-B7
C430	37-B7
C431	37-C7
C432	37-C7
C433	37-B6
C434	37-C7
C435	36-A7
C436	36-A6
C437	36-A6
C438	36-A6
C439	36-A6
C440	36-A7
C441	26-B4
C442	34-A1
C443	34-A2
C444	41-C7
C445	34-A1
C446	34-B2
C447	34-B1
C448	34-A1
C449	34-A1
C450	34-B1
C451	28-C5
C452	28-B8
C453	28-C4
C454	28-C2
C455	28-C2
C456	28-C2
C457	28-C3
C458	28-C4
C459	28-C8
C460	28-C3
C467	32-C5
C468	31-C6
C469	31-C6
C470	32-B5
C471	31-C7
C472	31-C7
C473	39-B3
C474	39-A3
C475	38-C2
C476	38-C2
C478	40-B3
C479	40-A3
C480	36-A3
C481	36-A3
C482	18-D7
C483	18-D8
C484	20-D3
C485	21-D4
C486	22-D1
C487	26-B4
C488	25-A4
C489	25-C4
C490	25-A4
C491	25-A5
C492	25-A5
C493	34-B2
C494	34-A2
C495	34-B3
C496	34-B7
C497	34-B8
C498	27-D3
C499	27-D2
C503	31-A3
C504	39-B3
C505	39-B2
C506	39-A3
C507	39-A2
C509	37-B5
C510	18-B5
C511	18-B4
C512	18-D2
C513	18-D4
C514	20-D2
C515	20-D3
C516	21-D1
C517	21-D1
C518	21-D2
C519	21-D4
C520	22-D5
C521	22-D5
C522	22-D4
C523	26-D3
C524	41-C7
C525	26-B4
C526	41-B6
C527	25-A4
C528	14-A8
C530	27-A3
C531	27-A3
C532	23-A2
C537	31-D2
C539	31-D3
C540	31-D3
C541	10-A4
C542	33-C2
C543	18-D5
C544	18-D2
C545	18-D4
C546	18-D4
C547	18-D2
C548	18-D4
C549	20-D2
C550	20-D2
C551	20-D2
C552	21-D2
C553	22-D4
C554	22-D4
C555	22-D4
C556	14-C7
C557	14-C1
C558	13-A7
C559	13-D1
C560	13-A8
C561	23-D3
C562	23-A5
C563	23-D3
C564	23-D2
C565	23-D2
C566	23-A2
C567	23-D2
C568	23-A1
C569	23-A1
C570	23-A2
C571	23-D1
C572	23-A2
C573	23-A2
C574	23-A2
C575	8-B4
C576	8-B3
C577	8-B1
C578	8-B3
C579	8-B3
C580	8-C4
C581	19-D4
C582	19-A1
C583	19-D1
C584	19-B1
C585	19-A1
C586	19-D1
C587	18-D4
C588	18-D4
C589	20-D2
C590	20-D2
C591	21-D1
C592	21-D1
C593	21-D2
C594	22-D4
C595	22-D4
C596	22-D4
C597	22-D4
C599	30-B6
C600	30-B7
C601	14-A7
C602	14-A1
C603	13-A7
C604	13-D1
C605	12-C5
C606	12-C5
C607	12-C5
C608	12-C5
C609	23-D7
C610	5-B5
C611	23-C7
C612	23-D3
C613	23-D1
C614	23-D2
C615	23-D1
C616	23-A2
C617	8-C4
C618	8-C5
C619	19-A1
C620	19-B1
C621	19-D2
C622	19-D3
C623	19-D3
C624	19-D2
C625	19-D3
C626	19-A2
C627	19-A2
C628	19-A2
C629	19-A2
C630	19-D4
C631	19-D1
C632	19-A1
C633	19-B1
C634	18-D8
C635	20-D4
C636	22-D2
C637	30-C7
C638	30-B5
C639	14-A7
C640	14-A1
C641	13-A7
C642	13-B1
C643	12-C2
C644	12-C2
C645	12-C2
C646	12-C2
C647	5-A6
C648	5-A6
C649	5-A4
C650	5-A6
C651	5-A5
C652	5-B4
C653	5-B6
C654	9-D6
C655	9-D6
C656	9-D7
C657	9-D7
C658	9-D7
C659	9-D7
C660	9-D7
C661	9-A7
C662	9-D7
C663	9-D6
C664	9-D6
C665	19-D2
C666	19-B2
C667	19-A2
C668	19-A2
C669	19-B2
C670	19-A1
C671	19-A1
C672	19-D4
C673	19-D5
C674	19-D4
C675	19-D3
C676	19-B2
C677	19-A2
C678	19-D4
C679	19-B2
C680	19-D3
C681	19-A2
C682	19-D2
C683	19-A1
C684	19-B1
C685	19-D1
C686	19-A1
C687	7-B4
C688	7-C2
C689	20-D4
C690	20-D4
C691	21-D4
C692	22-D2
C693	22-D2
C694	14-C7
C695	14-C1
C696	13-B7
C697	13-B1
C698	6-B2
C699	6-B2
C700	9-D6
C701	9-D6
C702	9-D7
C703	9-D7
C704	9-D7
C705	9-D7
C706	20-D4
C707	21-D4
C708	22-D2
C709	41-C7
C710	14-C7
C711	14-B1
C712	13-C7
C713	13-C1
C714	15-A5
C715	15-A5
C716	9-A7
C717	9-D7
C718	9-A6
C719	9-A6
C720	9-D7
C721	9-D7
C722	9-D7
C723	9-D7
C724	3-A6
C725	3-A5
C726	3-A8
C727	3-A6
C728	3-A5
C729	3-D2
C730	3-D3
C731	3-A5
C732	14-B7
C733	14-B1
C734	13-C7
C735	13-D1
C736	7-A6
C737	3-A5
C738	3-A7
C739	3-A7
C740	3-D2
C741	3-A7
C742	3-D1
C743	3-A5
C744	36-A5
C745	16-B5
C746	16-A5
C747	16-B3
C748	14-A7
C749	14-C1
C750	13-C7
C751	13-A1
C752	12-A5
C753	12-A5
C754	7-B4
C755	3-A6
C756	3-D2
C757	3-A6
C758	3-A5
C759	3-A6
C760	3-A4
C761	24-A6
C762	24-B1
C763	12-A5
C764	12-A5
C765	5-D6
C766	5-D5
C767	5-D4
C768	5-D4
C769	5-D4
C770	3-A5
C771	3-D3
C772	3-A4
C773	24-B2
C778	14-D7
C779	14-D1
C780	13-D7
C781	13-A1
C782	12-A2
C783	12-A2
C784	5-D6
C785	5-D3
C786	3-D3
C787	3-A5
C788	3-A6
C789	3-A7
C790	3-A3
C791	3-A3
C792	3-A5
C793	3-D1
C794	3-A5
C795	3-A6
C796	3-A7
C798	12-A2
C799	12-A2
C800	16-D4
C801	5-D5
C802	3-A3
C803	3-A3
C804	3-A4
C805	16-B5
C806	17-C3
C807	17-D3
C808	17-C3
C809	17-C6
C810	17-D3
C811	17-D3
C812	17-C3
C814	30-B3
C817	14-A1
C818	13-A1
C819	24-B3
C820	24-B3
C821	24-B4
C822	37-B2
C823	37-C2
C824	37-C2
C825	37-C2
C826	40-A6
C827	40-B6
C828	4-C3
C829	4-B3
C830	4-C3
C831	4-D5
C832	4-B4
C833	4-A6
C834	4-A6
C835	4-A7
C836	4-A6
C837	4-A7
C838	17-C4
C839	17-D4
C840	17-C4
C841	17-C4
C842	17-D4
C843	17-D4
C845	17-C4
C852	17-C3
C853	17-C4
C1043	41-B5
C1044	41-B5
C1045	41-B5
C1046	41-B5
C1047	41-C5
C1048	41-B5
C1049	41-C5
C1700	17-C5
C1701	17-D4
C1702	17-D4
D1	31-A4
D2	3-D4
D3	3-D4
D4	28-A6
D5	28-D6
D6	33-C6
D7	33-C5
D8	24-A1
D9	24-A2
D10	4-B6
DS1	26-C4
DS4	32-C7
DS5	32-A7
DS6	30-B5
DS7	16-B2
DS8	24-B1
DS9	17-A6
F1	24-B6
F2	32-B2
F4	32-B3
F7	16-B5
G1	31-D4
G2	8-C2
G3	8-C3
J1	26-C4
J2	35-D2
J3	39-C5
J4	32-C7
J5	35-D5
J6	28-B8
J7	24-B7
J8	38-B1
J9	22-C4
J10	21-C6
J11	20-C6
J12	18-C5
J13	35-C6
J14	25-C4
J15	30-B6
J18	5-B4
J19	13-D3
J20	13-D6
J21	14-D3
J22	14-D6
J23	16-B3
J24	3-C3
J25	5-C3
J26	15-B4
J27	15-B4
J28	16-C4
J30	24-B2
J31	17-D5
J33	16-B6
J34	40-B7
J35	37-C1
L1	39-B4
L2	39-A4
L4	39-B4
L6	39-D5
L7	39-D5
L8	39-C5
L9	39-C5
L10	39-D5
L11	32-C7
L12	32-A7
L13	39-D5
L14	39-D6
L15	31-D3
L16	31-A5
L17	31-A1
L18	31-A2
L19	27-C2
L20	27-D2
L21	25-A5
L22	8-A2
L23	7-B1
L24	5-A4
L25	5-A7
L26	7-B4
L27	6-A1
L28	7-A3
L29	6-A1
L30	7-A7
L31	17-B6
L32	3-A2
L33	4-B6
L34	40-B6
L35	17-B6
L50	24-B6
L51	24-C6
L52	24-B6
L53	24-B6
L68	32-C5
L69	32-B4
L70	32-C5
L71	32-C4
L72	32-A4
L73	32-A5
L74	39-D6
L75	39-C6
L76	39-C6
L77	39-D6
L78	39-D6
L79	39-B4
L80	39-B4
L81	39-B4
L82	39-A4
L83	39-B4
L84	38-A3
L85	38-B3
L86	38-C3
L87	37-A4
L88	25-D6
L89	25-C6
L90	25-B6
L91	25-A6
L92	25-A3
L93	37-B3
L94	37-B3
L95	37-C3
L96	37-C3
L97	40-A6
L98	4-A7
L101	17-B4
L109	17-B4
L110	17-A3
Q1	28-A5
Q4	39-A3
Q5	39-A3
Q6	39-A3
Q7	39-B3
Q8	39-B3
Q9	33-B3
Q10	33-C7
Q11	33-C7
Q12	24-A6
Q19	16-B5
Q20	16-B5
Q21	40-C6
Q52	26-B6
Q53	33-B2
Q54	24-A4
Q55	24-A4
Q56	24-B1
Q59	24-C6
Q60	4-C5
Q61	4-A5
R1	26-B2
R2	26-A2
R3	29-B5
R4	29-C6
R5	36-C6
R6	23-C7
R7	23-C7
R8	23-C7
R9	28-B7
R10	39-D7
R11	24-D4
R12	24-D3
R13	39-D7
R14	39-C7
R15	39-C7
R16	11-A2
R17	11-A2
R18	26-C2
R19	26-C2
R20	26-C2
R21	25-D6
R22	25-D6
R23	11-C2
R24	11-A1
R25	30-D5
R26	26-C5
R27	26-D2
R28	26-C2
R29	26-C5
R30	26-C3
R31	26-C2
R32	26-C2
R33	26-C2
R34	22-A3
R35	22-A3
R36	22-A3
R37	21-A4
R38	21-A5
R39	21-A5
R40	20-A4
R41	20-A5
R42	20-A5
R43	17-C2
R44	37-C5
R45	39-A2
R46	39-B2
R47	22-B6
R48	22-B3
R49	21-B4
R50	20-B4
R51	20-B2
R52	20-B7
R53	20-B4
R54	20-B7
R55	20-B4
R56	20-B4
R57	18-B7
R58	18-B7
R59	18-B4
R60	18-C7
R61	18-C7
R62	33-C7
R63	33-B6
R64	33-B5
R65	33-B6
R66	10-A6
R67	10-B6
R68	37-B3
R69	10-A6
R70	10-A6
R71	37-B3
R72	37-C3
R73	33-B5
R74	33-C5
R75	30-D5
R76	30-D4
R77	31-D5
R78	31-B5
R79	31-B5
R80	31-A4
R81	30-C4
R82	30-C5
R83	27-D2
R84	25-B4
R85	25-A3
R86	25-A3
R87	25-B3
R88	20-B4
R89	20-B7
R90	20-B7
R91	20-B4
R92	20-B7
R93	18-B7
R94	18-B7
R95	18-C4
R96	18-C7
R97	31-C2
R98	31-D2
R99	31-C3
R100	19-D5
R101	19-C6
R102	19-D6
R103	19-C5
R104	19-C5
R105	19-C6
R106	19-C5
R107	19-C6
R108	29-B7
R109	30-B2
R110	30-B5
R111	30-B4
R112	30-B5
R113	20-C7
R114	18-C7
R115	19-B1
R116	19-B2
R117	19-C3
R118	19-C3
R119	19-C3
R120	8-C5
R121	11-A5
R122	11-B5
R123	11-A5
R124	11-A7
R125	20-C7
R126	7-B3
R127	7-C4
R128	7-B4
R129	23-B7
R130	23-B7
R131	23-B6
R132	23-B7
R133	23-B6
R134	5-B5
R135	5-A5
R136	5-B6
R137	5-B6
R138	5-A6
R139	5-A7
R140	5-B7
R141	11-C5
R142	11-A5
R143	11-C5
R144	11-B6
R145	11-D6
R146	11-C7
R147	11-A7
R148	11-C7
R149	11-C7
R150	9-B7
R151	9-D5
R152	11-C5
R153	11-A5
R154	11-A5
R155	11-C5
R156	11-C2
R157	11-C2
R158	11-B2
R159	11-A2
R160	6-C5
R161	6-B5
R162	6-B5
R163	6-B5
R164	11-B2
R165	10-D4
R166	17-B6
R167	9-D6
R168	9-D5
R169	9-D5
R170	6-C5
R171	6-A5
R172	6-A5
R173	11-B2
R174	11-B2
R175	11-C3
R176	11-A2
R177	11-B3
R178	11-B4
R179	11-B4
R180	11-B4
R181	7-A5
R182	11-C3
R183	11-C3
R184	11-C3
R185	11-D3
R186	11-D4
R187	11-C4
R188	11-C4
R189	11-C4
R190	30-C5
R191	30-D6
R192	19-C3
R193	19-C3
R194	16-D3
R195	17-B4
R196	16-D3
R197	16-D5
R198	16-D3
R199	35-C2
R200	28-A5
R201	28-A4
R202	28-B5
R203	28-A6
R204	28-A6
R205	3-C3
R206	16-B4
R207	16-A5
R208	16-D6
R209	16-D6
R210	16-D7
R211	28-C6
R212	28-D6
R213	35-B2
R214	35-B4
R215	23-D5
R216	4-B5
R217	4-B5
R218	4-D7
R219	4-C5
R220	4-C7
R221	4-C7
R222	40-C3
R223	24-B3
R224	24-B3
R225	24-C4
R226	29-A6
R227	32-B2
R228	32-B2
R229	31-B6
R230	31-B6
R231	31-B6
R232	31-C6
R233	37-B3
R234	37-C3
R235	37-C3
R236	32-C3
R237	32-C3
R238	25-B3
R239	17-C2
R240	17-C2
R241	23-C6
R242	29-C3
R243	15-A5
R244	15-A5
R245	23-C6
R246	23-C2
R247	23-C2
R248	23-C2
R249	23-C2
R250	23-C6
R251	23-C6
R252	38-A3
R253	38-A4
R254	38-B4
R255	38-B5
R256	19-C6
R257	38-C4
R258	38-C3
R259	38-B3
R260	24-B4
R261	38-B4
R262	17-D3
R263	11-B2
R264	11-B2
R265	11-B2
R266	11-C2
R267	16-C6
R268	16-C6
R269	17-D2
R270	38-B5
R271	38-C5
R272	9-C2
R273	15-D2
R274	15-D4
R275	15-D4
R276	15-D2
R277	15-D3
R278	15-D3

Reference Locator 1

ECS CAD GENERATED
APPLE CONFIDENTIAL

NOTICE OF PROPRIETARY PROPERTY
THE INFORMATION CONTAINED HEREIN IS THE PROPRIETARY PROPERTY OF APPLE COMPUTER, INC. THE POSSESSOR AGREES TO THE FOLLOWING
(I) TO MAINTAIN THE DOCUMENT IN CONFIDENCE
(II) NOT TO REPRODUCE OR COPY IT
(III) NOT TO REVEAL OR PUBLISH IT IN WHOLE OR PART

Apple Computer, Inc

SIZE	DRAWING NUMBER	REV.
D	051-0777	C
SCALE NONE	SHT 42 OF 43	

REFERENCE DESIGNATOR LOCATIONS

R278	15-D3
R280	15-C3
R281	15-D2
R282	15-D2
R283	5-A6
R284	17-C7
R285	17-B4
R286	17-D6
R287	17-D7
R288	39-B4
R289	39-B4
R290	29-D2
R291	29-D3
R293	29-D2
R318	24-B6
R320	24-A6
R321	24-A6
R345	24-C2
R400	35-B3
R401	35-B3
R402	35-B5
R407	39-C7
R408	36-C4
R409	36-D4
R410	36-C6
R411	36-A8
R412	36-A8
R413	36-A7
R414	30-B3
R415	29-B6
R416	30-C2
R418	29-C7
R419	22-B5
R420	29-C6
R421	21-B6
R422	29-B6
R423	20-B6
R424	29-B3
R425	29-B3
R426	35-A4
R427	35-A3
R428	35-B6
R429	35-A5
R430	34-A4
R431	34-A4
R432	28-B6
R433	28-B6
R434	28-B4
R435	28-C4
R436	28-B6
R437	28-B4
R438	28-C6
R439	28-C3
R449	25-C6
R450	25-D6
R451	39-B2
R452	39-D7
R453	39-C7
R454	39-C7
R455	39-B2
R456	38-C6
R457	38-C6
R458	38-B6
R459	38-C6
R460	38-B6
R461	38-B6
R462	37-B6
R463	37-B6
R464	37-B6
R467	37-C6
R468	37-C6
R470	29-C6
R471	29-C5
R472	29-C2
R474	29-B2
R475	29-B3
R476	30-B2
R477	29-C7
R478	35-B2
R479	35-C7
R480	35-C2
R481	35-B7
R482	35-B7
R483	35-C7
R484	34-D4
R485	34-C2
R486	28-B2
R487	28-C2
R488	27-C4
R489	28-A6
R490	28-B2
R491	28-B2
R509	39-D6
R510	39-B3
R511	39-B3
R512	39-A3
R513	39-C3
R514	39-A3
R515	39-A3
R516	39-A3
R517	39-B3
R518	25-A6
R519	25-B6
R520	39-A2
R521	39-B2
R522	36-A2
R523	36-A2
R524	18-B7
R525	18-A4
R526	18-A4
R527	18-A5
R528	18-B5
R529	20-A7
R530	20-A5
R531	20-B5
R532	21-A7
R533	21-B4
R534	21-B5
R535	22-A5
R536	22-B4
R537	26-C3
R538	26-C5
R539	26-C3
R540	26-C2
R541	35-B7
R542	35-C7
R543	25-C3
R544	25-C3
R545	25-C3
R546	25-C3
R547	25-B3
R548	25-B3
R549	25-B3
R551	34-C3
R552	34-D2
R553	34-C3
R554	27-D4
R555	27-B4
R556	27-C3
R557	27-A3
R559	27-D4
R560	27-B2
R561	27-C2
R562	27-B2
R563	27-B2
R564	27-B7
R565	27-B2
R566	27-B4
R567	27-B3
R568	27-A3
R569	27-A2
R570	27-D3
R571	27-B7
R572	27-C7
R573	27-B6
R574	27-A3
R575	27-C7
R576	27-C7
R580	32-A7
R581	32-C7
R586	31-A4
R591	37-A3
R592	37-B5
R593	33-C6
R594	33-C6
R595	37-A5
R596	37-B3
R597	37-A3
R598	33-A4
R599	33-B2
R600	33-B3
R601	33-B3
R602	33-A3
R603	33-B3
R604	18-A4
R605	18-B4
R606	26-C4
R607	26-D2
R608	26-D2
R613	27-C2
R614	27-C3
R615	27-C7
R616	28-C6
R624	31-D5
R628	31-D5
R629	31-D6
R630	31-B5
R635	33-C5
R636	33-C4
R637	33-B4
R638	33-C2
R639	33-B2
R640	23-B3
R641	23-A3
R645	23-D4
R646	23-D2
R647	23-D2
R649	31-C5
R650	31-D6
R651	31-C5
R652	31-A4
R655	31-D5
R656	31-C5
R657	31-C6
R658	31-C6
R659	31-C7
R660	31-C7
R661	31-D4
R662	10-B6
R663	10-B6
R664	10-A5
R665	10-A4
R666	10-A4
R667	10-A4
R668	10-B4
R669	10-B3
R670	10-B3
R671	18-B4
R672	18-C4
R673	18-C4
R674	20-B7
R675	20-C2
R676	20-B7
R677	20-B7
R678	14-D5
R679	14-D5
R680	14-D2
R681	14-D2
R682	13-D5
R683	13-D5
R684	13-D2
R685	13-D2
R686	12-D5
R687	12-C7
R688	26-B7
R689	26-B6
R690	26-B6
R691	23-B2
R692	23-D4
R695	23-C2
R696	23-D2
R697	23-D2
R698	23-D2
R699	23-B6
R700	23-B7
R701	8-A2
R702	8-B2
R703	10-B5
R704	10-B6
R705	10-B5
R706	10-B5
R707	18-B5
R708	30-A2
R709	29-B7
R710	30-A7
R711	29-B7
R712	30-B7
R713	12-D6
R714	12-C5
R715	26-B6
R717	23-C2
R720	23-C7
R721	23-C2
R722	23-C2
R723	23-C2
R724	23-C2
R725	23-C2
R726	23-C2
R727	23-D2
R728	8-B4
R729	8-B6
R730	8-C4
R731	8-C4
R732	8-B2
R733	19-C5
R734	19-C6
R735	19-C5
R736	19-C6
R737	19-C5
R738	19-C5
R739	19-C5
R740	19-D6
R741	19-D5
R742	19-D5
R743	19-C3
R744	19-B2
R745	18-C5
R746	20-C4
R747	30-A2
R748	30-A7
R749	30-B5
R750	11-B7
R751	12-D3
R752	11-B7
R753	12-D2
R754	12-C4
R755	12-C2
R756	12-D6
R757	5-B6
R758	6-B7
R759	6-B6
R760	6-B7
R761	23-C7
R762	23-C7
R763	5-B5
R764	5-B4
R765	23-A4
R766	5-B4
R767	23-B7
R768	23-B7
R769	23-B7
R770	23-B6
R771	23-B7
R772	23-B6
R773	23-B6
R774	23-B6
R775	23-B6
R776	23-B7
R777	23-B6
R778	23-B7
R779	23-B7
R780	23-B6
R781	8-B6
R782	8-B6
R783	23-C7
R784	9-B3
R785	8-C4
R786	19-C5
R787	19-C6
R788	19-D6
R789	19-C6
R790	19-D5
R791	19-D6
R792	19-D6
R793	19-C3
R794	19-D6
R795	19-B3
R796	19-C3
R797	19-C3
R798	19-C3
R799	19-C3
R800	19-B3
R801	19-D6
R802	7-C4
R803	7-C5
R804	7-B4
R805	7-C3
R806	30-B5
R807	30-B4
R808	16-A2
R809	12-D3
R810	5-B6
R811	5-B5
R814	6-B7
R815	6-B6
R816	6-B7
R817	6-B7
R818	9-B2
R819	9-B2
R820	9-B2
R821	9-C2
R822	9-C2
R823	9-B2
R824	9-B2
R825	9-A5
R826	9-B2
R827	9-B7
R828	9-B7
R829	19-B6
R830	19-D6
R831	7-C2
R832	7-C3
R833	7-C2
R834	7-C2
R835	7-C6
R836	7-C5
R837	7-C3
R838	7-C3
R839	6-C2
R840	6-B2
R841	6-C8
R842	6-A3
R843	6-A2
R844	6-A2
R845	6-B2
R846	6-B2
R847	11-B5
R848	11-C2
R849	11-C2
R850	11-B2
R851	6-B2
R852	6-B2
R853	9-D2
R854	11-A5
R855	9-C2
R856	9-D2
R857	9-C7
R858	9-B7
R859	9-C7
R860	9-B7
R861	9-C7
R862	9-A3
R863	9-A3
R864	9-C7
R865	9-C7
R866	9-D4
R867	9-C7
R868	19-D5
R869	19-D5
R870	7-D3
R871	7-C6
R872	7-C5
R873	7-C5
R874	7-C3
R875	7-C3
R876	7-C3
R877	21-A3
R878	6-C5
R879	6-C7
R880	6-D5
R881	6-D6
R882	6-D7
R883	6-D7
R884	9-C2
R885	9-A7
R886	9-B6
R887	11-B2
R888	11-A2
R889	7-C5
R890	7-C3
R891	12-B5
R892	6-C7
R893	6-C6
R894	6-D6
R895	6-C7
R896	6-D7
R897	6-D7
R899	15-C4
R900	7-B5
R901	7-B7
R902	7-A7
R903	3-B6
R904	3-B6
R905	3-B7
R906	3-B6
R907	3-B7
R909	17-B7
R910	17-B7
R911	24-A7
R912	24-A7
R913	17-B7
R914	24-B6
R915	24-A5
R916	24-A4
R917	24-A4
R918	36-A4
R919	16-A3
R920	12-B6
R921	12-B7
R922	12-B5
R923	6-C6
R924	6-C7
R925	6-C7
R926	15-A5
R927	15-A4
R928	7-B6
R929	7-B5
R930	7-B5
R931	7-A4
R932	7-B4
R933	7-B4
R934	3-C7
R935	3-B7
R936	3-B8
R937	3-C2
R938	3-B8
R939	3-B6
R940	3-B7
R941	3-B7
R946	24-B2
R947	24-A3
R948	12-B3
R949	12-B2
R950	12-B4
R951	12-B6
R952	12-B3
R953	6-C7
R954	16-C5
R955	16-C5
R956	15-C5
R957	15-B4
R958	15-B4
R959	15-B4
R960	15-B3
R961	7-B6
R962	7-B5
R963	7-B5
R964	5-C5
R965	5-C5
R966	5-C5
R967	5-C4
R968	3-B7
R969	3-C6
R970	3-C2
R971	3-C3
R972	3-B7
R973	3-C2
R974	3-D5
R975	3-C2
R976	17-A7
R978	17-A5
R979	17-B6
R980	17-B4
R981	17-A4
R982	17-A5
R983	24-C3
R984	24-C2
R985	24-B2
R986	24-C3
R987	24-B1
R992	12-B2
R993	15-B6
R994	40-C5
R995	40-C4
R996	40-C6
R997	16-C5
R998	16-C5
R999	16-C5
R1000	16-D5
R1001	16-D2
R1002	16-D2
R1003	16-C2
R1004	16-D3
R1005	7-B5
R1006	3-D6
R1007	3-D6
R1008	3-C2
R1009	3-D3
R1010	3-D6
R1011	3-C3
R1012	3-B6
R1013	3-B6
R1014	3-C2
R1015	3-D5
R1016	3-C2
R1017	3-C2
R1018	3-C2
R1019	3-C2
R1020	3-C1
R1021	3-C1
R1022	3-C2
R1023	3-C2
R1024	3-D5
R1025	3-D4
R1026	17-A6
R1030	30-A3
R1031	24-C5
R1032	24-C6
R1033	24-C6
R1034	24-C5
R1035	24-C4
R1036	24-C5
R1037	24-C5
R1038	24-C3
R1039	24-B5
R1040	40-C6
R1041	40-B3
R1042	40-B3
R1043	40-A3
R1044	40-A4
R1045	40-B5
R1046	40-B5
R1047	16-D5
R1048	16-D6
R1049	16-D4
R1050	16-C3
R1051	16-C3
R1052	4-C6
R1053	4-D7
R1054	4-B2
R1055	4-C2
R1056	4-B2
R1057	4-C2
R1058	4-B3
R1059	4-C6
R1060	3-A3
R1061	16-A5
R1062	16-B4
R1063	16-B5
R1064	16-B6
R1069	17-B4
R1072	24-D7
R1073	24-D7
R1074	4-A3
R1075	4-A5
RP1	26-A3
RP2	26-A3
RP3	29-A5
RP4	29-A5
RP5	36-C2
RP6	27-C6
RP7	25-B7
RP8	20-B2
RP9	19-C8
RP10	19-C1
RP11	11-A6
RP12	11-A6
RP13	21-C3
RP14	21-C3
RP15	19-A3
RP16	19-A3
RP17	9-C2
RP18	11-C6
RP19	21-C3
RP20	21-B3
RP21	21-B3
RP22	7-D3
RP23	19-C3
RP24	19-B3
RP25	19-B7
RP26	9-D2
RP27	9-C2
RP28	9-C2
RP29	11-C6
RP30	11-C7
RP31	21-B3
RP32	21-B3
RP33	19-B3
RP34	6-C5
RP35	6-B5
RP36	10-D5
RP37	10-C5
RP38	21-B3
RP39	21-A3
RP40	19-B3
RP41	19-A6
RP42	19-A7
RP43	19-A7
RP44	6-B5
RP45	10-C5
RP46	10-B5
RP47	11-B3
RP48	15-B3
RP49	15-B2
RP50	11-B4
RP51	11-B4
RP52	11-A4
RP53	11-D3
RP54	11-C4
RP55	11-C3
RP56	11-C4
RP57	17-C7
RP61	5-D4
RP62	15-B7
RP63	15-B6
RP100	36-C8
RP101	29-A6
RP102	29-A6
RP103	36-C2
RP104	36-D4
RP105	26-B3
RP106	26-B2
RP107	26-B3
RP108	18-C2
RP109	20-C2
RP110	18-C2
RP111	18-C2
RP112	18-B2
RP113	20-C2
RP114	20-C2
RP115	20-B2
RP116	30-C3
RP117	23-B3
RP118	23-B3
RP119	23-B1
RP120	10-A5
RP121	10-A2
RP122	10-A3
RP123	18-B2
RP124	30-B3
RP125	30-B3
RP126	30-B3
RP127	19-C2
RP128	18-B2
RP129	18-B2
RP130	20-C2
RP131	20-B2
RP132	5-A3
RP134	19-B7
RP135	19-C3
RP136	19-B3
RP137	19-B3
RP138	19-A3
RP139	19-A3
RP140	18-B2
RP141	18-A2
RP142	18-A2
RP143	20-C2
RP144	11-B7
RP145	11-B6
RP146	19-C7
RP147	19-A3
RP148	19-A3
RP149	20-A2
RP150	19-B6
RP151	19-A3
RP152	19-C3
RP153	19-B8
RP154	19-B7
RP155	19-B3
RP156	19-B3
RP157	19-A7
RP158	19-A7
RP159	19-A6
RP160	19-A6
RP161	19-B3
RP162	19-B3
RP163	19-B3
RP164	6-A5
RP165	3-B2
RP166	3-B2
RP167	5-C2
RP168	5-C5
RP169	5-D4
RP170	5-D4
RP171	3-A6
RP172	5-C2
RP173	5-C2
RP174	3-B6
RP175	3-B6
RP176	24-B5
S4	24-C2
S5	24-C6
T1	28-B3
U1	29-C4
U2	36-C4
U3	32-C6
U4	28-A6
U5	35-B5
U6	35-A4
U7	37-B4
U8	39-A2
U9	27-C4
U10	34-D4
U11	33-C5
U12	10-B4
U13	31-D3
U14	32-B2
U15	32-C3
U16	23-D6
U17	8-C5
U18	23-D4
U19	26-B7
U20	7-C3
U21	7-D3
U22	19-D5
U23	9-C3
U24	5-B5
U25	6-B3
U26	11-B6
U27	11-C6
U28	10-C4
U29	11-B3
U30	11-D3
U31	17-B6
U32	38-B4
U33	15-D3
U34	17-B7
U35	7-B5
U36	15-C5
U37	15-B5
U38	4-B4
U39	40-B4
U40	24-C4
U41	34-B3
U42	12-D6
U43	12-D3
U44	12-B6
U45	12-B3
U46	24-B2
U47	17-C6
U48	29-D3
VR1	36-A3
VR2	36-A5
VR3	36-A7
XS3800	4-D4
XS3801	38-B5
XS3802	38-C5
XS3900	36-A1
XS3902	36-A1
XS3905	36-A1
XS3906	36-A1
XS3907	36-A1
XS3909	36-A1
XS3910	36-A1
XS3911	36-A1
XS3912	36-A1
XS3913	36-A1
XS3914	36-A1
XS3915	36-A1
XS3916	36-B1
XS3917	36-B1
XS3918	36-B1
XS3919	36-B1
XS3920	36-B1
XS3922	36-B1
XS3923	36-A1
XS3924	36-B1
XS3925	36-B1
XS3926	36-B1
XS3927	36-B1
XS3928	40-A2
XS3929	36-B1
XS3930	36-B1
XS4000	37-D2
XS4001	37-D2
XS4002	37-D2
XS4003	37-D2
XS4300	40-D3
XS4301	40-D3
XS4302	40-D3
XW1	12-B2
XW2	12-C2
XW3	12-B2
XW4	12-D2
XW5	12-C5
XW6	12-B5
XW7	12-B5
XW8	12-D5
XW30	3-A4
XW31	3-A1
XW100	18-A7
XW102	18-A5
XW103	18-A7
XW104	18-A7
XW200	21-A7
XW202	21-A5
XW203	21-A7
XW204	21-A7
XW300	3-C6
XW301	3-C6
XW302	3-C6
XW303	3-D6
XW304	3-D6
XW400	37-C3
XW456	19-C3
XW801	9-A4
XW802	9-A4
XW803	9-A4
XW804	9-A4
XW805	9-A4
XW1600	19-D3
XW1601	19-D3
XW1602	19-D3
XW1603	19-D3
XW1700	20-A7
XW1701	20-A7
XW1702	20-A7
XW1703	20-A5
XW1900	22-A6
XW1901	22-A5
XW1902	22-A6
XW1903	22-A3
XW1999	23-D7
XW2000	23-D7
XW2001	23-D7
XW2002	23-D7
XW2003	23-D7
XW8723	22-B3
Y2	27-A4
Y3	5-B5
Y4	24-B3
ZH2	41-A6
ZH3	41-A5
ZH7	41-A7
ZH8	41-A5
ZH9	41-B5
ZH10	41-B5
ZH11	41-B6
ZH12	41-B5
ZH13	41-B6
ZH14	41-B5
ZH15	41-C5
ZH16	41-A4
ZH17	41-A4
ZH18	41-B4
ZH19	41-B4
ZH20	41-B4
ZH3800	4-D4
ZH3900	36-A1
ZH4000	37-D2
ZH4300	40-C3

Reference Locator 2

ECS CAD GENERATED
APPLE CONFIDENTIAL

NOTICE OF PROPRIETARY PROPERTY
THE INFORMATION CONTAINED HEREIN IS THE PROPRIETARY PROPERTY OF APPLE COMPUTER, INC. THE POSSESSOR AGREES TO THE FOLLOWING
(I) TO MAINTAIN THE DOCUMENT IN CONFIDENCE
(II) NOT TO REPRODUCE OR COPY IT
(III) NOT TO REVEAL OR PUBLISH IT IN WHOLE OR PART

Apple Computer, Inc

SIZE	DRAWING NUMBER	REV.
D	051-0777	C
SCALE NONE	SHT 43 OF 43	

PROTO REVISION HISTORY

PROTO1 - 6 MAY 98
FEATURE CHANGES
- ELIMINATE FRONT PANEL HEADPHONE AND ASSOCIATED CIRCUITRY
- REMOVE PROVISION FOR FRONT PANEL FIREWIRE
- REMOVE INTERNAL USB PORT
- REMOVE 2 EXTERNAL USB PORTS
- REMOVE SECOND ULTRA-ATA PORT
- REMOVE RCA LINE IN/OUT CONNECTOR AND CIRCUITRY
- ADD BI-COLOR LED ON FRONT PANEL BOARD AND ASSOCIATED CIRCUITRY ON MLB
- INTEGRATE IRDA AND FPB ON NEW COMBO IRDA/FPB BOARD

PROTO1 BUG LIST FROM RADAR:
TAG #1 - MOVED USB PCISEL BIT TO PCIAD22
TAG #2 - MOVED PADDINGTON PCISEL BIT TO PCIAD21
TAG #3 - SET Y3 SET TO STUFF (STUFFING ERROR)
TAG #4 - REVERSE BURGUNGY/PADDINGTON CLOCK CHIP'S XI/XO BITS (SYMBOL ERROR)
TAG #5 - CORRECT PCI SYSTEM CLOCK CONTENTION (STUFFING ERROR)
TAG #6 - CORRECT POWER TO GROUND SHORT UNDER DAC (PCB ERROR)
TAG #7 - MAKE EXTERNAL CLOCK SOURCE RESISTOR NO-STUFF (STUFFING ERROR)
TAG #8 - CORRECT BOOT ROM MSB ADDRESS ERROR
TAG #9 - REMOVE PIN 20 ON UATA AND IDE CONNECTORS (STUFFING ERROR)
TAG #10 - MAKE POWERON* TO +5TRICKLE A NO-STUFF
TAG #11 - CORRECT NON-MONTONIC EDGES ON SYSRST* AND CUDANMI*
TAG #12 - CORRECTED CAPS MIS-LOAD WITH RESISTORS (STUFFING ERROR)
TAG #13 - L2TSTCLK NOW PULLED LOW (STUFFING ERROR)
TAG #14 - CHANGED VIO PINS FOR DEC BRIDGE
TAG #15 - CORRECTED BR1DTY* FLOATING BUS REQUEST (STUFFING ERROR)
TAG #16 - CONNECTED SLOTRST* TO SOUTH PCI SLOTS
TAG #17 - CORRECTED SHORTED PCI SLOTS PCIIDSEL BITS
TAG #18 - CORRECTED S5 MIS-WIRE (CUDA SOFT-START)
TAG #19 - CORRECTED PFW TO +5V PULL-UP RESISTOR VALUE
TAG #20 - CORRECTED CUDA SIGNAL PULL-UP VALUE ERROR (STUFFING ERROR)
TAG #21 - STUFFED L16 FOR USB POWER (STUFFING ERROR)
TAG #22 - CORRECTED R888 WRONG VALUE - WAS CRASHING ON RESTART
TAG #23 - CORRECTED +5VTRICKLE EXCESSIVE LOAD (USING TRANSISTOR)
TAG #24 - PULLED-UP SPCIACK64*
TAG #25 - COMBINED IRDA AND FPB CONNECTORS - CORRECTS IRDA WIRING ERROR
TAG #26 - ADDED SEPERATE PULL-DOWN RESISTORS FOR PROPER CONFIGURATION
TAG #27 - {de-assigned}
TAG #28 - FIXES IN TAG #26 CORRECT THIS CONFIGURATION ERROR
TAG #29 - FIXES IN TAG #26 CORRECT THIS CONFIGURATION ERROR
TAG #30 - ADDED P/Ds TO ASICTMS & ASICTCLK, SCANPCITMS & SCANPCITCLK
TAG #31 - FIREWIRE BUS HOLDERS NEED +3.3V & ASSORT. VALUE CHANGES
TAG #32 - 400MHZ IBM INTERPOSER DOES NOT FUNCTION
TAG #33 - 66MHZ PCI SLOT CLOCK DELAY STUFFONG ERROR

NO TAG #1 - MOVE PCI EXTRA TRACE LENGTHS TO BETWEEN J10 AND J11
NO TAG #2 - INCREASE TRACE WIDTH ON BOTH SIDES OF R43
NO TAG #3 - CORRECTED USE OF 0646U VS. 0646U2 DESIGN ERROR
NO TAG #4 - CHANGED DATA CAPS TO 2KV = THEN CHANGE BACK TO ORIGINAL
NO TAG #5 - MAKE 100MPBS YEL AND 10MBPS GRN (SCHEMATIC AND PCB CHANGE)
NO TAG #6 - ADDED SUPPORT FOR +5V VCC FLASH ROM
NO TAG #7 - ADDED RESISTORS TO USB POWER-ON FEEDBACK CIRCUIT (OVL*)
NO TAG #8 - CHANGED GATED CLOCKS-II'S RESET TO ONE WITH A +3.3V SWING
NO TAG #9 - CHANGE ENET CONNECTOR MOUNTING HOLES TO PLATED-THRU
NO TAG #10 - WATCH FOR FAB HOUSE CREATED SHORTS!
NO TAG #11 - MOVE L98 TO TOP SIDE OF PCB
NO TAG #12 - CHANGED PID BITS TO MATCH MSB-LSB
NO TAG #13 - REMOVE PLANE POUR UNDER ANALOG ETHERNET AREA
NO TAG #14 - ADD SERIES RESISTOR TO CUDA'S RESET INPUT
NO TAG #15 - CHANGED TO SG500C WHICH REQUIRED A PINOUT REVISION
NO TAG #16 - ADDED STUFFING OPTIONS FOR FAN SPEED CONTROL
NO TAG #17 - GROUND STITCHING CAPS ADDED FOR 3 SIDES OF PCB
NO TAG #18 - INCORPORATE MOUNTING AND TOOLING HOLE CHANGES
NO TAG #19 - VERIFY GEOMETRY OF U34, 310S0008
NO TAG #20 - ENSURE VREG TAB SIZE PADS ARE INCREASED
NO TAG #21 - YR1 REFERENCE DESIGNATOR CHANGED
NO TAG #22 - PADDINGTON FIREWIRE READ BIT MOVED TO BIT 1
NO TAG #23 - ADDED AMP MIC SENSE SIGNAL FOR S/W GAIN CONTROL
NO TAG #24 - ADDED PUs TO GRMA(4:0) AND GRSDBA(0)
NO TAG #25 - ADD DOUBLE VIAS ON LOW FREQUENCY CAPS
NO TAG #26 - AUDIO VALUE CHANGES TO HEADPHONE CIRCUIT
NO TAG #27 - MOVE HEADPHONE AMP AWAY FROM 66MHZ CLOCKS

EVT REVISION HISTORY

EVTA - 22JUNE98
EVTA BUG LIST FROM RADAR:
TAG #1 - U34 HAS WRONG PART LOADED - NO SCHEMATIC CHANGE
TAG #2 - USB CHIP IS OPTI BUT SHOULD BE LUCENT
TAG #3 - ROMS BOTTOM BOOT BLOCK NOT WRITABLE
TAG #4 - UATA AND IDE CONNECTORS ARE SWAPPED
TAG #5 - MODEM CONNECTOR MAY BE REVERSED
TAG #6 - MEMORY PROFILE RESISTORS SHOULD NOT BE LOADED
TAG #7 - CLOCK SERIES TERMINATIONS NEED VALUE CHANGES
TAG #8 - CLOCK DELAY MAZES NEED STUFFING CHANGES
TAG #9 - FIREWIRE SCLKS NOMIMAL VOLTAGE NOT CENTERED
TAG #10 - LUCENT USB CHIP CAUSES SHORT BETWEEN +3.3V AND +5V
TAG #11 - UATA/IDE DRIVE SIGNALS HAVE POOR QUALITY
TAG #12 - CUDA P/D MISSING
TAG #13 - UATA SET TO RAID MODE
TAG #14 - ASCITRST* AND SCANPCITRST* HAVE BAD LEVELS
TAG #15 - ENET LEDS DO NOT OPERATE CORRECTLY
TAG #16 - VR2-1 GROUND (CONNECTION AND TRACE SIZE) ERROR
TAG #17 - UATA POWERED FROM +3.3V SHOULD BE FROM +5V
TAG #18 - ANTIPOPBIAS CIRCUIT MISSING
TAG #19 - MISSING P/U ON BURGUNDY POWERON
TAG #20 - CPU CORE VOLTAGE REGULATOR CIRCUIT HAS GLITCHES ON FEEDBACK LOOP
TAG #21 - HEADPHONE CAPS ARE WRONG VALUE
TAG #22 - IRDA CLOCK AND HANDSHAKE SIGNALS REVERSED
TAG #23 - POWER PROTECTION DIODES SHOULD BE STUFFED
TAG #24 - OPTI USB CONTROLLER POWEROK INPUTS WIRED INCORRECTLY
TAG #25 - DVD INPUT CAPS SHOULD BE 1UF NPO X7R
TAG #26 - SYSTEM POWERS-UP WHEN INSERTING AC/DC POWER CABLE
TAG #27 - USB SWITCH REPORTS OVL WHEN DEVICE IS INSERTED

NO TAG #1 - SILK SCREEN NEEDS ENHANCEMENT
NO TAG #2 - THERE ARE 2 NETNAME SHORTS

EVTB - 8JULY98
EVTB BUG LIST FROM RADAR:
TAG #1 - ANTIPOPBIAS CIRCUIT MISSING
TAG #2 - BURGUNDY ENABLE NOT PULLED-UP
TAG #3 - HEADPHONE CAPS ARE WRONG VALUE
TAG #4 - CPU CORE VOLTAGE REGULATOR CIRCUIT HAS GLITCHES ON FEEDBACK LOOP
TAG #5 - POWER PROTECTION DIODES SHOULD BE STUFFED
TAG #6 - OPTI USB CONTROLLER POWEROK INPUTS WIRED INCORRECTLY
TAG #7 - IRDA CLOCK AND HANDSHAKE SIGNALS REVERSED
TAG #8 - DVD INPUT CAPS SHOULD BE 1UF NPO X7R
TAG #9 - SYSTEM POWERS-UP WHEN INSERTING AC/DC POWER CABLE
TAG #10 - USB CHIP REPORTS OVL WHEN DEVICE IS INSERTED
TAG #11 - DVD DAC IS WRONG TYPE FOR C-QUBE CHIP
TAG #12 - PCI ARBITOR SHOULD NT BE PART OF SCAN CHAIN
TAG #13 - FLASH ROM'S BOTTOM BOOT BLOCK IS STILL WRITABLE
TAG #14 - IRDA TO CHASSIS/LOGIC GND CAPS SHOULD NOT BE STUFFED
TAG #15 - MODEM POWER-UP SIGNAL CONNECTED INCORRECTLY W/ NO PU
TAG #16 - BURGUNDY SENSE CAPS ARE WRONG VALUE
TAG #17 - DAC HAS NO PD RESISTORS ON IT'S INPUTS
TAG #18 - HEADPHONE SERIES RESISTORS ARE WRONG VALUE
TAG #19 - HEADPHONE OPAMP IS WRONG VALUE
TAG #20 -SPEAKER AMP EMI CAPS ARE WRONG VALUE
TAG #21 - ULTRA-ATA DSTROBE* HAS BAD TIMING AND HIGH LEVELS
TAG #22 - SG500 SHOULD BE SHOULD BE CHANGED TO USE THE REV D PART
TAG #23 - ULTRA-ATA DSTROBE* STILL HAS BAD TIMING (TAKE 2)
TAG #24 - CORE REGULATOR LESS STABLE THAN EXPECTED
TAG #25 - USB'S OSCILLATOR IS UNSTABLE
TAG #26 - 18.432MHZ OSCILLATOR IS UNSTABLE
TAG #27 - SDRAM ADDRESS BUFFERS NOT INITIALIZED PROPERLY
TAG #28 - SYSTEM POWERS-UP WHEN INSERTING AC/DC POWER CABLE (TAKE 2)
TAG #29 - ULTRA-ATA DSTROBE* STILL HAS BAD TIMING (TAKE 3)

NO TAG #1 - SILK SCREEN PART LABELS IN CORRECT LOCATION AND IN BIGGER FONT
NO TAG #2 - EMI SHIELD TOUCHES F1
NO TAG #3 - 66MHZ PCI CLOCKS NEED LENGTH CHANGES
NO TAG #4 - BGA PINS NEED SOLDER MASK FOR PRODUCTION
NO TAG #5 - 33MHZ PCI SIGNALS AND SOME PCI CLOCKS NEED NET LENGTH CONSTRAINTS
NO TAG #6 - IRDA OUTPUT SIGNALS NEED SERIES TERMINATION
NO TAG #7 - ENET CONNECTOR SHOULD BE CHANGED TO EXCLUDE LEDS
NO TAG #8 - H/W AND PCB GROUPS HAVING DIFFICULTIES MAINTAINING NET LENGTH FILES
NO TAG #9 - PCI SLOT'S REQS AND INTS ARE SHORTED ACROSS ALL SLOTS
NO TAG #10 - 1/O EMI SHIELD MOUNT POST IS TOO CLOSE TO L98
NO TAG #11 - SYSRST* AND NMISW* HAVE NON-MONOTONIX EDGES

DVT REVISION HISTORY

DVT - 4SEPT98
DVT BUG LIST FROM RADAR:
TAG #1 - UNCONNECTED INPUT PINS ON CHIP USED FOR RESET AND NMI
TAG #2 - GATED CLOCKS-II'S SINGLE-CYCLE GRANTS NOT ALWAYS RECOGNIZED
TAG #3 - NMI / FPB SWITCH DOES NOT FUNCTION
TAG #4 - SOUND RECORDING FAILS WITH PARTIAL DATA
TAG #5 - INPUT CHANNEL CROSSTALK SPEC NOT MET WITH COMPONENT VALUES
TAG #6 - HIGH SOFT ERROR RATE ON ATA(4) INTERFACE
TAG #7 - FPB'S POWER SWITCH SHOULD CONNECTED TO 'CHASSIS SWITCH'
TAG #8 - SDRAM FAILURES CAUSED FROM TOO SLOW A RISE TIME
TAG #9 - SDRAM SDBA(1) STILL HAS TOO SLOW A RISE TIME UNDER HEAVY LOADS

NO TAG #1 - MODEM AND F/W CONNECTORS SHOULD HAVE PIN-1 INDICATOR
NO TAG #2 - SOME CAPS ARE TOO CLOSE TO MEMORY DIMM CONNECTORS
NO TAG #3 - SOME VIA HOLES LOCATED AT BGA ARE NOT MASKED BY SILKSCREEN
NO TAG #4 - SOLDER BALLS AT LOCATION J25 AFTER REFLOW
NO TAG #5 - USB PORT ORDERING DOES NOT AGREE WITH HI SPEC

PVT REVISION HISTORY

PVT - 9NOV98
PVT BUG LIST FROM RADAR:
TAG #1 - WRONG F/W LYNX CHIP WAS STUFFED ON SOME BOARDS
TAG #2 - SDRAM FAILURES CAUSED FROM TOO SLOW A RISE TIME
TAG #3 - SDRAM SDBA(1) STILL HAS TOO SLOW A RISE TIME UNDER HEAVY LOADS
TAG #4 - BURGUNDY SOUND CHIP FAILS TO COME READY ON COLD BOOT

NO TAG #1 - R285, R1069 & C807 COULD CRACK AS FPB CONNECTOR IS INSERTED
NO TAG #2 - ETHERNET CAPS SHOULD BE 1.5KV MINIMUM

PRODUCTION REVISION HISTORY

PROD - 12JAN99
PVT BUG LIST FROM RADAR:
TAG #1 - DIMM SIGNAL SD1BA(1) HAS BAD SIGNAL QUALITY

Revision History

ECS CAD GENERATED
APPLE CONFIDENTIAL

NOTICE OF PROPRIETARY PROPERTY
THE INFORMATION CONTAINED HEREIN IS THE PROPRIETARY PROPERTY OF APPLE COMPUTER, INC. THE POSSESSOR AGREES TO THE FOLLOWING
(I) TO MAINTAIN THE DOCUMENT IN CONFIDENCE
(II) NOT TO REPRODUCE OR COPY IT
(III) NOT TO REVEAL OR PUBLISH IT IN WHOLE OR PART

Apple Computer, Inc

SIZE	DRAWING NUMBER	REV.
D	051-0777	C
SCALE NONE	SHT 44 OF 43	

YOSEMITE PRODUCTION REV-C BOM

Yosemite_prodvc.bom

Date: 99/1/20 - Time: 14:21:51

Item#	Qty	Part#	Package	Description	Value	Voltage	Wattage	Tolerance	Ref. Designators
STUFF List:									
1	4	101S1000	RES_0805	RESISTOR,	0		1/10W		R80,R243,R513,R667
2	1	101S1101	RES_0805	RESISTOR,	10		1/10W		R455
3	4	101S1105	RES_0805	RESISTOR,	100K		1/10W		R512,R516,R994,R1040
4	2	101S1273	RES_0805	RESISTOR,	2.7K		1/10W		R511,R514
5	3	101S2471	RES_2010	RESISTOR,	47		1/2W	5%	R411,R412,R413
6	1	101S4000	RES_1210	RESISTOR,	0		1/4W		R83
7	1	101S6151	RES_2512	RESISTOR,	15		1W		R1074
8	3	101S6201	RES_2512	RESISTOR,	20		1W		R522,R523,R918
9	1	101S8101	RES_1206	RESISTOR,	10		1/8W		R701
10	1	101S8330	RES_1206	RESISTOR,	3.3		1/8W		R702
11	1	106S1822	RES_0805	RESISTOR,	182		1/10W	1%	R518
12	4	110S1001	RES_0603	RESISTOR,	10		1/16W	1%	R510,R515,R885,R1060
13	2	110S1002	RES_0603	RESISTOR,	100		1/16W	1%	R715,R1052
14	8	110S1004	RES_0603	RESISTOR,	10k		1/16W	1%	R45,R46,R451,R463,R468,R517,R520,R521
15	6	110S1005	RES_0603	RESISTOR,	100k		1/16W	1%	R252,R253,R255,R257,R258,R259
16	2	110S2214	RES_0603	RESISTOR,	22.1K		1/16W	1%	R554,R1043
17	2	110S3011	RES_0603	RESISTOR,	30.1		1/16W	1%	R458,R464
18	10	110S4991	RES_0603	RESISTOR,	49.9		1/16W	1%	R432,R433,R434,R436,R437,R438,R486,R487,R490,R491
19	2	110S7501	RES_0603	RESISTOR,	75		1/16W	1%	R435,R439
20	8	110S8252	RES_0603	RESISTOR,	825		1/16W	1%	R407,R449,R450,R452,R453,R454,R456,R460
21	23	112-8200	RP_8MINI_SMJ	RPAK, 8 PIN, ISOLATED,	10		1/16W		RP11,RP12,RP18,RP29,RP30,RP34,RP35,RP36,RP37,RP44, RP45,RP46,RP47,RP50,RP51,RP52,RP53,RP54,RP55,RP56, RP144,RP145,RP164
22	48	112-8204	RP_8MINI_SMJ	RPAK, 8 PIN, ISOLATED,	22		1/16W		RP6,RP8,RP13,RP14,RP15,RP16,RP17,RP19,RP20,RP21, RP26,RP27,RP28,RP31,RP32,RP38,RP39,RP48,RP49,RP104, RP108,RP109,RP110,RP111,RP112,RP113,RP114,RP115,RP123,RP128, RP129,RP130,RP131,RP136,RP137,RP138,RP139,RP140,RP141,RP142, RP143,RP147,RP148,RP149,RP151,RP167,RP172,RP173
23	9	112-8207	RP_8MINI_SMJ	RPAK, 8 PIN, ISOLATED,	33		1/16W		RP1,RP2,RP105,RP106,RP107,RP116,RP124,RP125,RP126
24	2	112-8216	RP_8MINI_SMJ	RPAK, 8 PIN, ISOLATED,	100		1/16W		RP62,RP63
25	29	112-8241	RP_8MINI_SMJ	RPAK, 8 PIN, ISOLATED,	4.7K		1/16W		RP9,RP10,RP23,RP24,RP33,RP40,RP61,RP117,RP118,RP119, RP120,RP121,RP122,RP127,RP132,RP134,RP135,RP146,RP150,RP152, RP153,RP155,RP156,RP161,RP162,RP163,RP168,RP169,RP170
26	13	112-8248	RP_8MINI_SMJ	RPAK, 8 PIN, ISOLATED,	10K		1/16W		RP25,RP41,RP42,RP43,RP57,RP154,RP157,RP158,RP159,RP160, RP174,RP175,RP176
27	4	112-8264	RP_8MINI_SMJ	RPAK, 8 PIN, ISOLATED,	100K		1/16W		RP5,RP7,RP100,RP103
28	47	113S1000	RES_0603	RESISTOR,	0		1/16W		R26,R90,R120,R125,R136,R139,R192,R193,R208,R209, R218,R219,R220,R222,R228,R237,R260,R267,R268,R269, R288,R289,R290,R560,R561,R567,R613,R614,R663,R677, R692,R704,R712,R714,R755,R765,R803,R879,R883,R912, R922,R927,R949,R957,R960,R981,R1036
29	15	113S1101	RES_0603	RESISTOR,	10		1/16W		R85,R86,R87,R170,R195,R225,R241,R245,R250,R251, R285,R345,R547,R548,R549
30	2	113S1102	RES_0603	RESISTOR,	100		1/16W		R254,R993
31	38	113S1103	RES_0603	RESISTOR,	1K		1/16W		R4,R25,R29,R126,R144,R145,R165,R177,R181,R185, R190,R266,R281,R422,R471,R476,R539,R562,R563,R565, R640,R687,R754,R756,R757,R790,R809,R832,R900,R921, R946,R950,R951,R952,R958,R959,R986,R1030
32	71	113S1104	RES_0603	RESISTOR,	10K		1/16W		R2,R10,R66,R84,R194,R205,R210,R238,R273,R274,

Apple CONFIDENTIAL

YOSEMITE PRODUCTION REV-C BOM

									R275,R282,R318,R414,R415,R416,R418,R524,R528,R529,
									R531,R532,R534,R535,R536,R538,R664,R688,R710,R761,
									R825,R899,R903,R904,R905,R906,R907,R935,R936,R937,
									R940,R941,R955,R968,R970,R972,R973,R974,R975,R978,
									R980,R985,R999,R1000,R1001,R1002,R1004,R1008,R1011,R1012,
									R1013,R1016,R1017,R1022,R1023,R1031,R1034,R1047,R1049,R1061,
									R1069
33	5	113S1105	RES_0603	RESISTOR,	100K		1/16W		R5,R233,R234,R235,R783
34	18	113S1151	RES_0603	RESISTOR,	15		1/16W		R152,R153,R154,R155,R156,R157,R158,R159,R162,R163,
									R171,R172,R847,R848,R849,R850,R854,R887
35	1	113S1153	RES_0603	RESISTOR,	1.5K		1/16W		R261
36	10	113S1154	RES_0603	RESISTOR,	15K		1/16W		R227,R236,R601,R639,R657,R658,R659,R660,R995,R996
37	1	113S1155	RES_0603	RESISTOR,	150K		1/16W	5%	R637
38	2	113S1182	RES_0603	RESISTOR,	180		1/16W		R196,R198
39	1	113S1205	RES_0603	RESISTOR,	200K		1/16W		R216
40	157	113S1221	RES_0603	RESISTOR,	22		1/16W		R6,R7,R8,R19,R20,R28,R33,R34,R37,R40,
									R47,R48,R49,R50,R51,R52,R53,R54,R55,R56,
									R57,R58,R59,R60,R61,R67,R69,R88,R91,R92,
									R95,R96,R97,R98,R99,R101,R102,R103,R104,R105,
									R106,R107,R108,R113,R117,R118,R119,R127,R128,R138,
									R150,R160,R272,R283,R293,R320,R419,R421,R423,R425,
									R472,R477,R485,R525,R527,R530,R533,R543,R544,R545,
									R546,R551,R552,R569,R574,R591,R596,R597,R605,R608,
									R641,R671,R672,R673,R675,R676,R678,R679,R680,R681,
									R682,R683,R684,R685,R689,R690,R691,R709,R711,R729,
									R735,R738,R739,R743,R744,R746,R762,R781,R782,R784,
									R786,R787,R789,R791,R793,R796,R797,R798,R799,R800,
									R804,R822,R823,R824,R826,R827,R828,R829,R839,R840,
									R853,R855,R856,R857,R858,R859,R860,R861,R864,R865,
									R867,R877,R878,R880,R884,R909,R910,R913,R954,R971,
									R976,R997,R998,R1009,R1032,R1072,R1073
41	1	113S1222	RES_0603	RESISTOR,	220		1/16W		R1026
42	4	113S1223	RES_0603	RESISTOR,	2.2K		1/16W		R16,R17,R24,R888
43	4	113S1271	RES_0603	RESISTOR,	27		1/16W		R78,R79,R630,R656
44	47	113S1331	RES_0603	RESISTOR,	33		1/16W		R1,R31,R32,R110,R111,R112,R121,R122,R123,R124,
									R141,R142,R143,R146,R147,R148,R149,R164,R173,R174,
									R175,R176,R178,R179,R180,R182,R183,R184,R186,R187,
									R188,R189,R270,R271,R607,R740,R741,R742,R749,R750,
									R752,R794,R802,R805,R807,R902,R929
45	12	113S1332	RES_0603	RESISTOR,	330		1/16W		R276,R400,R402,R426,R428,R509,R580,R581,R606,R806,
									R808,R987
46	1	113S1333	RES_0603	RESISTOR,	3.3K		1/16W		R1059
47	2	113S1335	RES_0603	RESISTOR,	330K		1/16W		R134,R224
48	1	113S1392	RES_0603	RESISTOR,	390		1/16W		R484
49	32	113S1471	RES_0603	RESISTOR,	47		1/16W		R14,R21,R166,R408,R409,R459,R488,R519,R556,R559,
									R570,R571,R572,R573,R575,R576,R615,R624,R628,R629,
									R650,R655,R670,R730,R731,R732,R785,R788,R869,R938,
									R1018,R1019
50	3	113S1472	RES_0603	RESISTOR,	470		1/16W		R242,R934,R1033
51	112	113S1473	RES_0603	RESISTOR,	4.7K		1/16W		R11,R12,R35,R36,R38,R39,R41,R42,R62,R63,
									R64,R65,R70,R89,R93,R94,R100,R114,R115,R116,
									R129,R130,R131,R132,R133,R135,R167,R168,R169,R199,
									R206,R213,R215,R246,R247,R248,R249,R256,R286,R287,
									R424,R427,R429,R430,R431,R474,R475,R478,R481,R482,
									R526,R537,R541,R553,R555,R564,R566,R568,R604,R645,

Apple CONFIDENTIAL

YOSEMITE PRODUCTION REV-C BOM

									R647,R651,R666,R674,R695,R696,R697,R698,R699,R700,
									R707,R717,R720,R721,R722,R723,R724,R725,R726,R727,
									R728,R733,R734,R736,R737,R745,R767,R768,R769,R770,
									R771,R772,R773,R774,R775,R776,R777,R778,R779,R780,
									R792,R795,R811,R820,R868,R886,R979,R982,R1006,R1007,
									R1020,R1039
52	14	113S1474	RES_0603	RESISTOR,	47K		1/16W		R13,R15,R22,R457,R461,R593,R594,R598,R599,R600,
									R602,R603,R638,R1044
53	1	113S1475	RES_0603	RESISTOR,	470K		1/16W		R983
54	1	113S1516	RES_0603	RESISTOR,	5.1M		1/16W	5%	R223
55	3	113S1563	RES_0603	RESISTOR,	5.6K		1/16W		R30,R462,R467
56	6	113S1821	RES_0603	RESISTOR,	82		1/16W		R18,R27,R109,R540,R708,R747
57	1	113S1823	RES_0603	RESISTOR,	8.2K		1/16W		R636
58	1	127S1001	CAP_TANTA_SM	CAPACITOR, POLARIZED,	1UF	10V		20%	C245
59	17	127S1008	CAP_TANTR_SMA	CAPACITOR, POLARIZED,	1UF	10V		10%	C20,C21,C22,C23,C26,C27,C28,C32,C34,C36,
									C37,C38,C98,C411,C413,C420,C428
60	25	127S1015	CAP_TANTA_SM	CAPACITOR, POLARIZED,	10UF	6.3V		20%	C1,C3,C13,C104,C136,C142,C147,C150,C162,C186,
									C188,C190,C242,C243,C247,C252,C267,C272,C282,C301,
									C319,C528,C560,C817,C818
61	6	127S1021	CAP_TANTD_SM	CAPACITOR, POLARIZED,	100UF	10V		20%	C100,C101,C229,C318,C821,C837
62	3	127S2204	CAP_TANTR_SMA	CAPACITOR, POLARIZED,	2.2UF	6.3V		10%	C95,C96,C97
63	2	127S2210	CAP_TANTD_SM	CAPACITOR, POLARIZED,10UF	22UF	16V		20%	C132,C339
64	3	127S2218	CAP_TANTA_SM	CAPACITOR, TANTALUM	22UF	6.3V		10%	C43,C424,C433
65	2	127S3305	CAP_TANTA_SM	CAPACITOR, TANTALUM	3.3UF	16V		10%	C294,C346
66	3	127S3306	CAP_TANTB_SM	CAPACITOR, TANTALUM	3.3UF	25V		20%	C12,C292,C481
67	2	127S3310	CAP_TANTD_SM	CAPACITOR, POLARIZED,	33UF	20V		20%	C258,C291
68	27	127S4714	CAP_TANTD_SM	CAPACITOR, POLARIZED,	47UF	16V		20%	C4,C6,C10,C15,C19,C31,C39,C119,C122,C131,
									C161,C163,C178,C200,C203,C208,C220,C233,C259,C260,
									C269,C290,C293,C295,C296,C400,C527
69	2	128S0202	CAP_TANTE_SM	CAP,TANT,0.10ESR@100KHZ	330UF	6V		20%	C331,C337
70	8	128S0204	CAP_TANTD_SM	CAPACITOR, POLARIZED,	100UF	10V		20%	C268,C317,C332,C333,C334,C833,C834,C836
71	1	131S1013	CAP_0603	CAPACITOR, NON-POLARIZED,	10PF	50V		5%	C819
72	17	131S1025	CAP_0603	CAPACITOR, NON-POLARIZED,	100PF	50V		5%	C55,C56,C57,C58,C195,C196,C197,C198,C341,C599,
									C637,C638,C745,C746,C831,C1701,C1702
73	12	131S1034	CAP_0603	CAPACITOR, NON-POLARIZED,	1000PF	25V		5%	C33,C35,C404,C405,C410,C412,C421,C422,C425,C429,
									C431,C432
74	10	131S1512	CAP_0603	CAPACITOR, NON-POLARIZED,	15PF	50V		5%	C16,C59,C60,C61,C62,C63,C610,C617,C618,C653
75	5	131S3314	CAP_0603	CAPACITOR, NON-POLARIZED,	33PF	50V		10%	C505,C507,C530,C531,C820
76	1	131S4712	CAP_0603	CAPACITOR, NON-POLARIZED,	47PF	50V		10%	C523
77	1	131S4723	CAP_0603	CAPACITOR, NON-POLARIZED,	470PF	50V		10%	C82
78	4	131S5111	CAP_0805	CAPACITOR, NON-POLARIZED,	51PF	50V		5%	C66,C67,C68,C69
79	1	131S5621	CAP_0603	CAPACITOR, NON-POLARIZED,	560PF	50V		5%	C830
80	470	132S1046	CAP_0603	CAPACITOR, NON-POLARIZED,	0.01UF	50V		20%	C2,C5,C7,C8,C9,C11,C14,C18,C25,C30,
									C40,C46,C54,C64,C65,C70,C71,C80,C81,C83,
									C84,C85,C86,C87,C88,C89,C90,C91,C92,C93,
									C94,C99,C106,C107,C108,C109,C110,C111,C112,C113,
									C114,C115,C116,C117,C118,C120,C121,C123,C124,C125,
									C126,C127,C128,C129,C135,C137,C144,C145,C146,C149,
									C151,C152,C153,C154,C155,C157,C158,C159,C160,C164,
									C165,C166,C167,C168,C169,C170,C171,C172,C173,C174,
									C175,C176,C177,C179,C180,C181,C182,C183,C184,C187,
									C189,C193,C194,C199,C201,C202,C204,C205,C206,C207,
									C209,C210,C211,C212,C213,C214,C215,C216,C217,C218,
									C219,C221,C222,C224,C227,C228,C230,C231,C232,C234,
									C235,C236,C237,C238,C239,C240,C241,C244,C246,C248,

YOSEMITE PRODUCTION REV-C BOM

									C250,C253,C254,C255,C256,C257,C261,C262,C263,C264,
									C265,C266,C273,C274,C276,C277,C278,C279,C280,C283,
									C284,C285,C286,C287,C288,C289,C297,C298,C299,C300,
									C302,C303,C306,C307,C308,C309,C314,C315,C320,C321,
									C322,C323,C325,C330,C338,C340,C342,C344,C348,C350,
									C351,C352,C353,C401,C402,C440,C441,C442,C443,C444,
									C445,C446,C447,C448,C449,C450,C451,C452,C453,C454,
									C455,C456,C457,C458,C459,C460,C467,C470,C473,C480,
									C482,C483,C484,C485,C486,C487,C489,C490,C492,C493,
									C494,C495,C496,C497,C498,C499,C503,C509,C510,C511,
									C512,C513,C514,C515,C516,C517,C518,C519,C520,C521,
									C522,C524,C525,C526,C541,C543,C544,C545,C546,C547,
									C548,C549,C550,C551,C552,C553,C554,C555,C556,C557,
									C558,C559,C561,C562,C563,C564,C565,C566,C567,C568,
									C570,C571,C572,C573,C575,C576,C577,C578,C579,C580,
									C582,C583,C584,C585,C586,C587,C588,C589,C590,C591,
									C592,C593,C594,C595,C596,C597,C600,C601,C602,C603,
									C604,C605,C606,C607,C608,C612,C613,C614,C615,C616,
									C619,C620,C621,C622,C623,C624,C625,C626,C627,C628,
									C629,C631,C632,C633,C634,C635,C636,C639,C640,C641,
									C642,C643,C644,C645,C646,C648,C650,C651,C654,C655,
									C656,C657,C658,C659,C660,C662,C663,C664,C665,C666,
									C667,C668,C669,C670,C671,C672,C674,C675,C676,C677,
									C678,C679,C680,C681,C682,C683,C684,C685,C686,C689,
									C690,C691,C692,C693,C694,C695,C696,C697,C700,C701,
									C702,C703,C704,C705,C706,C707,C708,C709,C710,C711,
									C712,C713,C714,C715,C717,C718,C719,C720,C721,C722,
									C723,C724,C726,C727,C728,C729,C730,C732,C733,C734,
									C735,C738,C739,C740,C741,C742,C743,C744,C747,C748,
									C749,C750,C751,C752,C753,C755,C756,C757,C758,C759,
									C762,C763,C764,C765,C766,C767,C768,C769,C771,C773,
									C778,C779,C780,C781,C782,C783,C784,C785,C786,C788,
									C789,C790,C791,C792,C793,C795,C796,C798,C799,C800,
									C801,C852,C1043,C1044,C1045,C1046,C1047,C1048,C1049,C1700
81	1	132S1053	CAP_0805	CAPACITOR, NON-POLARIZED,	0.1UF	25V		20%	C828
82	23	132S1056	CAP_0603	CAPACITOR, NON-POLARIZED,	0.1UF	16V		-20,+80%	C17,C29,C42,C45,C349,C414,C415,C416,C417,C418,
									C419,C423,C426,C427,C435,C436,C437,C504,C829,C832,
									C835,C845,C853
83	2	132S1063		CAP, CER, 1UF, 10V, 10%					C430,C434
84	2	132S4743	CAP_0603	CAPACITOR, NON-POLARIZED,	0.047UF	16V		5%	C130,C542
85	4	138S0303	CAP_1206	CAPACITOR, NON-POLARIZED,	3.3UF	16V		-20,+80%	C324,C802,C803,C804
86	3	138S0312	CAP_0805	CAPACITOR, NON-POLARIZED,	1.0UF	16V		-20,+80%	C335,C478,C479
87	41	138S0313	CAP_0805	CAPACITOR, NON-POLARIZED,	2.2UF	16V		-20,+80%	C41,C44,C105,C133,C134,C148,C156,C225,C226,C249,
									C251,C275,C281,C343,C345,C347,C438,C439,C474,C488,
									C491,C532,C569,C574,C581,C630,C647,C649,C661,C673,
									C687,C716,C725,C731,C736,C737,C760,C770,C772,C787,
									C794
88	1	152S0080	IND_2W423_SM	INDUCTOR,	3.3UH				L98
89	4	155S0051	IND_0603	INDUCTOR,	300HM				L70,L71,L72,L73
90	7	155S0052	IND_0603	INDUCTOR,	1000OHM				L1,L2,L4,L80,L81,L82,L83
91	17	155S0070	FERRITE	INDUCTOR,	FERRITE-500MA				L16,L21,L22,L23,L24,L25,L26,L27,L28,L29,
									L30,L32,L34,L50,L53,L92,L97
92	4	155S0086	IND_1812_SM	INDUCTOR,	FERRITE-1.5A				L11,L12,L68,L69
93	28	155S0093	IND_0603	INDUCTOR,	FER-EMI-100-OHM				L6,L7,L8,L9,L10,L13,L14,L19,L20,L51,
									L52,L74,L75,L76,L77,L78,L79,L84,L85,L86,

Apple CONFIDENTIAL

YOSEMITE PRODUCTION REV-C BOM

									L87,L88,L89,L90,L91,L101,L109,L110
94	1	156-0034	IND_R180_D680	INDUCTOR,	2.8UH				L33
95	1	157S0171	XFR_16W455_SM	XFR, HIGH SPEED LAN MAGNETICS MODULES					T1
96	1	197S0100	CRY_2PIN_SM	CRYSTAL,	14.318M				Y3
97	1	197S0153	CRY_2PIN_SM	CRYSTAL,	25.0000M				Y2
98	1	197S0211	CRY_4PIN_SM	CRYSTAL, 4 PIN,	32.768K				Y4
99	1	197S0907	OSC_10X5MM_SM	OSCILLATOR, TRI-STATE,	18.4320M				G3
100	1	310S0008	SSOI_14W211	IC, QUAD 2-INPUT AND GATE, 14 P, TSSOP					U34
101	1	310S0014	SSOI_14W250	IC, LOW VOLTAGE HEX SCHMIDT TRIGGER INVERTER					U47
102	4	310S0015	TSSOP_56W276	IC, 3.3V 18-BIT UNIV BUS XCVR W/RES TRI-STATE OUTS					U42,U43,U44,U45
103	2	310S0245	SSOI-20W253	IC, 74LVCH245A, OCTAL BUS XCVR, TRISTATE					U5,U6
104	1	311S0125	SSOI_14W211	IC, 3.3V QUAD BUS BUFFERS W/3-STATE					U31
105	1	311S0257	SSOI_16W250	IC, 3.3V (5V)QUAD. 2-1 LINE DATA SEL/MULT. TSSOP					U33
106	1	333S0066	SOI_28W407	IC,SRAM,CMOS,32KX8,70NS					U19
107	1	337S0003		IC, ASIC-176-PQFP, LYNX-1					U10
108	1	337S0269		CMD UATA 0646U2-402					U1
109	1	337S0629	BGA_23X23_304	IC, ASIC, PCI TO PCI BRIDGE, 304-P BGA					U22
110	1	337S0630	FLA_16X16_L	IC, ST10040 ETHERNET TRANSCEIVER FOR 10BASE-T					U9
111	1	341S0184		IC, ROM, IEEE DUAL ADR					U16
112	1	341S0262	SOI_28W	IC, MICROCNTRLR, 68HC05E5, UCTLR, 2MHZ, LV, 28P					U40
113	1	341S0520		YOSEMITE FW ROM, PRGMD					U41
114	1	341S0537		1MX8, YOSEMITE FLASH ROM					U37
115	1	343S0120	SOI_8N	IC, LS1176, POWER MONITOR					U46
116	1	343S0177	FLA_20X30_W627	IC,ASIC,AUDIO CODEC,BURGUNDY,100P QFP					U2
117	1	343S1218	CBGA_19X16_303	IC, GRACKLE 4.0, 100MHZ, 303-P BGA					U23
118	1	343S1219	PLC_28	IC, ASIC, GATED CLOCK IIA, 28-P PLCC					U12
119	1	343S1225		PADDTON, BGA, ENET FAST					U18
120	2	353S0208	SOI_8N	IC, POWER DISTRIBUTION SWITCH					U14,U15
121	1	353S0209	SOI_16N	IC, CS5157, 5-BIT BUCK CNVTR PWM, 16P SOIC					U38
122	2	353S0223	SOI_8N	IC, OPAMP TS922ID,DUAL					U8,U32
123	1	353S0393	SOI_8N	IC, LM393, DUAL COMPARATOR					U11
124	2	353S7805	VREG_TO_252	VREG, 78M05, 5V,VOLTAGE REGULATOR, 5V					VR1,VR3
125	1	353S7905	VREG_TO_252	VREG, 79M05 VOLTAGE REGULATOR, -5V					VR2
126	1	355S0016	SOI_8N	AUDIO, LM4861 AUDIO POWER AMP,.5W					U39
127	1	355S0047	SOI_8N	IC, STEREO D/A CONVERTER, DIGITAL AUDIO					U7
128	1	359S0011	SOI_16N	IC, PLL CLOCK GENERATOR, CY2292					U17
129	2	359S0030	SSOI_24W210	IC, 3_3V PHASE-LOCK LOOP CLOCK DRIVER					U20,U35
130	1	359S0034	FLA_52W497	IC, SC683 SYSTEM CLOCK					U25
131	1	359S0038	SSOI_28W280	IC, SG500D 28-P SPREAD SPECTRUM CLK GEN					U24
132	4	371-5354	DIO_SMB_SM	DIODE, SCHOTTKY,	MBRS130T3				D1,D2,D3,D10
133	2	371S0914	DIO_SOT23_E	DIODE,	1N914				D8,D9
134	5	372S0012	TRA_SOT23	TRAN, TP0202T P-CHANNEL, MOSFET	TP0202T				Q4,Q5,Q6,Q7,Q8
135	5	372S3904	TRA_SOT23	TRAN, 2N3904, SM NPN	2N3904				Q10,Q11,Q12,Q56,Q59
136	2	372S3906	TRA_SOT23	TRAN, 2N3906, PNP SM	2N3906				Q9,Q53
137	2	372S7002	TRA_SOT23	TRAN, 2N7002, NFET SM	2N7002				Q21,Q52
138	2	376S0257	SOI_8N	TRA, N-CHANNEL ENHANCEMENT MODE MOSFET	SI4416DY				Q60,Q61
139	1	377S0010	SOI_8W230_65MM	IC, TRANSIENT SUPPRESSOR,8 PIN					U3
140	7	378S0038	LED_1206	LED,	GREEN				DS1,DS4,DS5,DS6,DS7,DS8,DS9
141	1	511-0024	SOC_PGA_288TH	IC, CPU, INTERPOSER					J24
142	3	513-0326	CON_64_5V_ST	CONN, PCI, TH, 64 BIT, 5V, 188-PIN					J9,J10,J11
143	1	513-1325	CON_32_3V_ST	CONN, PCI, TH, 32 BIT, 3V, 120 PIN					J12
144	1	515-1080	CON_M2RT_HDRF	CONN, HDR, RT, POLARIZED, REFLO					J34
145	1	515-1081	CON_M4RT_HDRE	CONN, HDR, RT, 0.1 CNTRS, POLARIZED REFLO					J8
146	1	515-1443	CON_M20RT_HDR	CONN, INT. FLPPY, .100 X .100					J31
147	1	515-1466	CON_M3RT_LOCK	CONN, RT ANGLE, FRICTION LOCK HDR					J2

YOSEMITE PRODUCTION REV-C BOM

148	1	515-1563	CON_M3ST_LCK	CONN, HDR, STR, 0.1" CTR, FRIC LCK, REFLOW					J5
149	1	515-1582	CON_M20ST_PWRA	CONN,PWR,20 PIN,MINI FIT					J23
150	2	515-1588	CON_M40ST_HDR	CONN,HDR,STR,2-ROW,0.1 PTCH,40P,W/O PIN 20,REF					J1,J15
151	1	515-1703	CON_M22ST_2MM	CONN, HDR, STR, 2 ROW, HI TEMP WITH STANDOFFS					J25
152	1	517-0249		CONN, USB, FOXCONN 2, 2P					J4
153	4	517-0782	CON_168ST_UDRM	CONN, SKT, DIMM, VERT, 3.3V, 168P					J19,J20,J21,J22
154	1	517-1259	CON_4RT_DIN_SR	CONN, SHIELDED, LOCKING MINI DIN, BRDLOCKS REFLOW					J7
155	1	519-0389		CONN, RJ45 SHORT, SHIELD					J6
156	1	519-0653	CON_STEREO3_4	CONN, PHONO JACK 4 W/3 POS					J3
157	1	519S0032	CON_F70SM_BTB	CONN, RCPT, BTB, 0.635MM					J14
158	1	519S0045	CON_F40SM_BTB	CONN, 40-P, .8MM, RCPT.					J13
159	1	525-0057		LITH, BAT HOLDER, 1P					BT1
160	2	705S0201	SWI_283X255_SM	SWITCH, 1 SWITCH, 4 PINS					S4,S5
161	1	740S0500	FUSE_POLY_SMD	FUSE, POLY, 0.9A	0.9AMP				F1
162	1	742-0029		BATTERY, LITHIUM, 3.6V					BT1
163	1	820-1049-A		PCB, YOSEMITE MLB					PCB1
164	1	875-1030		EMI SUPRESSOR, 100M-3GHZ					U25
BOM Option =ADR BUF, IDT-ALVCH (ALT)									
230	4	310S2244		IC, IDT-ALVCH16244, 2.6nS					U26,U27,U29,U30
BOM Option =ADR BUF, PHL-ALVCH (STD)									
231	4	310S6244		IC, PHL-ALVCH16244, 2.6nS					U26,U27,U29,U30
BOM Option =CTL BUF, IDT-ALVCH (ALT)									
232	1	310S2244		IC, IDT-ALVCH16244, 2.6nS					U28
BOM Option =CTL BUF, PHL-ALVCH (STD)									
233	1	310S6244		IC, PHL-ALVCH16244, 2.6nS					U28
BOM Option =USB IC, LUCENT									
234	1	101S1000	RES_0805	RESISTOR,	0		1/10W		R652
235	2	113S1000		RES, FF, 0 OHM, 5%, 1/16W					R231,R232
236	1	155S0070	FERRITE	INDUCTOR,	FERRITE-500MA				L18
237	1	337S0201		LUCENT 302 USB 100P PQFP					U13
BOM Option =USB IC, OPTI									
238	1	101S1000		RES, FF, 0 OHM, 5%, 0.1W					R586
239	2	113S1104	RES_0603	RESISTOR,	10K		1/16W		R229,R230
240	1	155S0070		FERRITE - 500MA					L17
241	1	337S0551		OPTI 82C861 USB 100P PQFP					U13
NO STUFF List:									
1	1	009-		PRGM, YOSEMITE 1MX8					U37
2	1	009-5911		PROG, FW, YOSEMITE					U41
3	1	009-5934		PROG, CMD HACK, YOSEMITE					U48
4	1	009-5939		PRGM, YOSEMITE 1MX8					U37
5	3	101S1000	RES_0805	RESISTOR,	0		1/10W		R244,R586,R665
6	1	101S1221	RES_0805	RESISTOR,	22		1/10W		R217
7	10	101S1241	RES_0805	RESISTOR,	24		1/10W		R764,R766,R833,R834,R845,R846,R851,R852,R932,R933
8	1	110S2003		RES, FF, 2K OHM, 1%, 1/16W					R1053
9	1	110S2213	RES_0603	RESISTOR,	2.21K		1/16W	1%	R221
10	1	110S4173		RES, FF, 4.17K OHM, 1%, 1/16W					R1053
11	1	110S4993		RES, FF, 4990 OHM, 1%, 1/16W					R219
12	1	110S8453		RES, FF, 8.45K OHM, 1%, 1/16W					R1053

Apple CONFIDENTIAL

YOSEMITE PRODUCTION REV-C BOM

13	1	112-8204	RP_8MINI_SMJ	RPAK, 8 PIN, ISOLATED,	22		1/16W		RP22
14	4	112-8241	RP_8MINI_SMJ	RPAK, 8 PIN, ISOLATED,	4.7K		1/16W		RP3,RP4,RP101,RP102
15	3	112-8248	RP_8MINI_SMJ	RPAK, 8 PIN, ISOLATED,	10K		1/16W		RP165,RP166,RP171
16	80	113S1000	RES_0603	RESISTOR,	0		1/16W		R44,R140,R214,R218,R219,R220,R231,R232,R277,R278,
									R279,R280,R284,R592,R595,R646,R668,R686,R703,R705,
									R706,R713,R751,R753,R758,R759,R760,R814,R815,R816,
									R817,R835,R836,R837,R838,R842,R871,R872,R873,R874,
									R875,R876,R881,R882,R889,R890,R891,R892,R893,R894,
									R895,R896,R897,R911,R914,R915,R920,R923,R924,R925,
									R926,R928,R930,R946,R948,R953,R961,R962,R963,R969,
									R992,R1005,R1037,R1048,R1054,R1055,R1056,R1057,R1058,R1064
17	29	113S1103	RES_0603	RESISTOR,	1K		1/16W		R75,R76,R81,R82,R151,R191,R203,R204,R211,R212,
									R263,R264,R265,R420,R748,R810,R821,R831,R841,R843,
									R844,R862,R863,R919,R931,R946,R958,R959,R1063
18	13	113S1104	RES_0603	RESISTOR,	10k		1/16W		R3,R197,R201,R470,R939,R956,R984,R1003,R1015,R1024,
									R1025,R1050,R1051
19	5	113S1105	RES_0603	RESISTOR,	100K		1/16W		R73,R74,R410,R635,R947
20	1	113S1112	RES_0603	RESISTOR,	110		1/16W		R9
21	6	113S1154	RES_0603	RESISTOR,	15K		1/16W		R916,R917,R1041,R1042,R1045,R1046
22	1	113S1205	RES_0603	RESISTOR,	200K		1/16W		R1075
23	11	113S1221	RES_0603	RESISTOR,	22		1/16W		R68,R71,R72,R77,R137,R161,R202,R669,R818,R819,
									R901
24	1	113S1223	RES_0603	RESISTOR,	2.2K		1/16W		R23
25	1	113S1273	RES_0603	RESISTOR,	2.7K		1/16W		R1062
26	1	113S1274		RES, FF, 27K OHM, 5%, 1/16W					R207
27	5	113S1332	RES_0603	RESISTOR,	330		1/16W		R262,R291,R489,R616,R870
28	1	113S1335	RES_0603	RESISTOR,	330K		1/16W	5%	R557
29	16	113S1471	RES_0603	RESISTOR,	47		1/16W		R43,R239,R240,R479,R480,R483,R542,R763,R801,R830,
									R964,R965,R966,R967,R1014,R1021
30	3	113S1472	RES_0603	RESISTOR,	470		1/16W		R200,R321,R663
31	8	113S1473	RES_0603	RESISTOR,	4.7K		1/16W		R226,R401,R649,R661,R866,R1010,R1035,R1038
32	1	113S1822	RES_0603	RESISTOR,	820		1/16W		R662
33	2	127S1008		CAP, TANT, 1UF, 10V, 10%					C430,C434
34	2	127S3305	CAP_TANTA_SM	CAPACITOR, POLARIZED,	3.3UF	16V		10%	C24,C311
35	1	127S4714		CAP, CER 3.3UF, 20%, 16V					C329
36	10	131S1025	CAP_0603	CAPACITOR, NON-POLARIZED,	100PF	50V		5%	C822,C823,C824,C825,C838,C839,C840,C841,C842,C843
37	5	131S1512	CAP_0603	CAPACITOR, NON-POLARIZED,	15PF	50V		5%	C403,C475,C476,C826,C827
38	1	131S1822	CAP_0603	CAPACITOR, NON-POLARIZED,	180PF	50V		5%	C506
39	2	131S3322	CAP_0603	CAPACITOR, NON-POLARIZED,	330PF	50V		10%	C609,C611
40	10	131S4712	CAP_0603	CAPACITOR, NON-POLARIZED,	47PF	50V		10%	C468,C469,C471,C472,C652,C688,C698,C699,C754,C814
41	6	131S4723	CAP_0603	CAPACITOR, NON-POLARIZED,	470PF	50V		10%	C806,C807,C808,C810,C811,C812
42	2	132S1032	CAP_0603	CAPACITOR, NON-POLARIZED,	0.001UF	50V		20%	C537,C540
43	11	132S1046	CAP_0603	CAPACITOR, NON-POLARIZED,	0.01UF	50V		20%	C47,C270,C271,C304,C305,C325,C539,C714,C715,C761,
									C809
44	1	132S1056	CAP_0603	CAPACITOR, NON-POLARIZED,	0.1UF	16V		-20,+80%	C336
45	1	138S0303		CAP, CER 3.3UF, 20%, 16V					C324
46	1	138S0312	CAP_0805	CAPACITOR, NON-POLARIZED,	1.0UF	16V		-20,+80%	C805
47	4	155S0070	FERRITE	INDUCTOR,	FERRITE-500MA				L15,L17,L31,L35
48	4	155S0093	IND_0603	INDUCTOR,	FER-EMI-100-OHM				L93,L94,L95,L96
49	1	197S0525	OSC_4PIN_SM	OSCILLATOR, TRI-STATE,	48.000M				G1
50	1	197S0906	OSC_10X5MM_SM	OSCILLATOR, TRI-STATE,	18.4320M				G2
51	1	293S0125	SOI_14N	IC, QUAD BUFFER W/TRI-STATE OUT					U4
52	1	312S3244	SSOI_20W250	IC, 3.3-V ABT OCTAL BUFFER/DRIVER W/3-STATE					U21
53	1	335S0253		IC, ROM, CMOS, 128X8, 64X16					U16
54	1	335S0266		PLD, GAL16V8, 10NS, PLCC					U48

YOSEMITE PRODUCTION REV-C BOM

55	1	335S0341		EEPROM, 256X8, BLANK					U41
56	1	335S0350		FLASH, 1MB, BTM BT, 110NS					U37
57	1	335S0354		FLASH, 1/2MB, BTM BT, 110NS					U37
58	1	337-2323		CPU, 350MHZ, 1MB, MOTO					J24
59	1	337-2324		CPU, 300MHZ, 512K, MOTO					J24
60	1	337-2325		CPU, 400MHZ, 1MB, MOTO					J24
61	1	337-2421		CPU, 300MHZ, 512K, IBM					J24
62	1	337-2424		CPU, 350MHZ, 1MB, IBM					J24
63	1	337-2426		CPU, 400MHZ, 1MB, IBM					J24
64	1	337-2520		CPU, 300MHZ, 512K, MOTO DYL					J24
65	1	337-2521		CPU, 350MHZ, 1MB, MOTO, DYL					J24
66	1	337-2522		CPU, 400MHZ, 1MB, MOTO, DYL					J24
67	1	337S0257		CMD UATA 0646U2-400					U1
68	1	337S0260		IC, ASIC-176-PQFP, LYNX-2					U10
69	1	337S7095		CMD 0670A USB 100P PQFP					U13
70	1	341S0450		IC, ROM, IEEE SINGLE ADR					U16
71	1	341S0534		CMD HACK PLD, PRGMD					U48
72	1	341S0537		1MX8, YOSEMITE FLASH ROM					U37
73	1	343S1211		PADDTON, BGA, ENET STD					U18
74	4	371S0914	DIO_SOT23_E	DIODE,	1N914				D4,D5,D6,D7
75	3	372S3904	TRA_SOT23	TRAN, 2N3904, SM NPN	2N3904				Q1,Q19,Q55
76	2	372S3906	TRA_SOT23	TRAN, 2N3906, PNP SM	2N3906				Q20,Q54
77	1	511S0019		SCKT, TSOP, 0.5MM, 40P					U37
78	2	515-0053	CON_2ST_HDRA	CONN, 2 PIN STRAIGHT HEADER					J26,J27
79	1	515-0930	CON_M16ST_HDR	CONN, 16 PIN STRAIGHT HEADER					J28
80	1	515-1081	CON_M4RT_HDRE	CONN, HDR, RT, 0.1 CNTRS, POLARIZED REFLO					J35
81	1	515-1083		CON, 3P RT-ANGLE					J33
82	1	515-1464	CON_M4ST_HDRD	CONN, HDR, ST, 1-ROW, 0.1 PITCH, 4 POS 3-PINS					J30
83	1	517-0260		CONN, USB, OTHER, 2P					J4
84	1	517-0977	CON_5JKSMA_200	CONN,COAX JACK,STR,SMA,PCB MT					J18
85	1	517-0995		CONN, USB, FOXCONN 1, 2P					J4
86	2	517-1230		CONN, SHUNT JUMPER					J26,J27
87	1	519-0857		CONN, RJ45, SHIELD, 2 LEDS					J6
88	1	519-1100		JMPR, BLACK, 300/100/66/33					J25
89	1	519-1101		JMPR, BLUE, 350/100/66/33					J25
90	1	519-1102		JMPR, WHITE, 400/100/66/33					J25
91	1	519-1103		JMPR, YELLOW, 450/100/66/33					J25
92	1	519-1104		JMPR, RED, 500/100/66/33					J25
93	1	520-0344		LITH, BAT HOLDER, TOP					BT1
94	1	525-0055		LITH, BAT HOLDER, BOTTOM					BT1
95	1	609-0066		SPKR ASSY, YOSEMITE					J34
96	1	630-		FDB, FUJI PHY					U13
97	1	630-2732		FDB, TI PHY					U13
98	1	731-0062		SPKR, 8-OHM, 2W, 40x70MM					J34
99	1	740S0505		FUSE, 2.5A 15V					F7
100	2	740S0507	FUSE_POLY_350	FUSE,	1.5AMP				F2,F4
101	1	742-0029		BATTERY, LITHIUM, 3.6V					BT1
102	1	PN-PROM-1MX16-120-TSOP	TSOP_44W445	IC, 1Mx16, 120NS MASK PROM					U36
NOTE: FOLLOWING AREA PROVIDED FOR REFERENCE ONLY									
The Bom Options used to generate this list were:									
ARB PWR, +3.3V									
BATT, LITHIUM 1P									
CLK EMI SUP, ENA									
CPU CAPS, ENA									

YOSEMITE PRODUCTION REV-C BOM

CPU CLKS, NORM		
CPU CORE, DIG STD		
CPU I/O CAPS, ENA		
CUDA PWR, SFT		
DVD CAP, CER		
DVD INPUT, DIG		
DVD VIA, PCI		
ENET LED, DIS		
FLASH PRGM, 5V		
FLASH PWR, 3.3V		
FPB LED CNTL, ENA		
FW IC, TI-1		
FW ROM, YOSEMITE ID		
GC SCAN, DIS		
GRKL BUFS, 16244		
I/O OSC, STD SOURCE		
I2C VOLT, +3.3V		
IDE LED, ENA		
IRDA, DIS		
LED PWR, +5V		
PADDTON, ENET FAST		
PCI66, NORM		
ROM BOOT, AUTO		
ROM ENET, DUAL ADR		
ROM FLASH, PROD		
SCLKS, NORM		
SFT PWR, PS/2		
TST CON, ICT		
UATA 0646U2-402		
UATA CE, SW ENA		
UATA CHRDY, ASYNC		
UATA CLK, CMOS		
UATA DEV TYPE, NATIVE		
UATA DEV, STORAGE		
UATA LED, ENA		
UATA PCIMODE, NORM		
UATA REQ FIX, BYP		
USB CLK, MAIN CLK		
USB CONN, FOXCONN 2		
USB LED, ENA		
USB PWR, SWITCH		
The bom options that were copied to this file were:		
CTL BUF, IDT-ALVCH (ALT)		
ADR BUF, PHL-ALVCH (STD)		
USB IC, LUCENT		
USB IC, OPTI		
ADR BUF, IDT-ALVCH (ALT)		
CTL BUF, PHL-ALVCH (STD)		

Apple CONFIDENTIAL

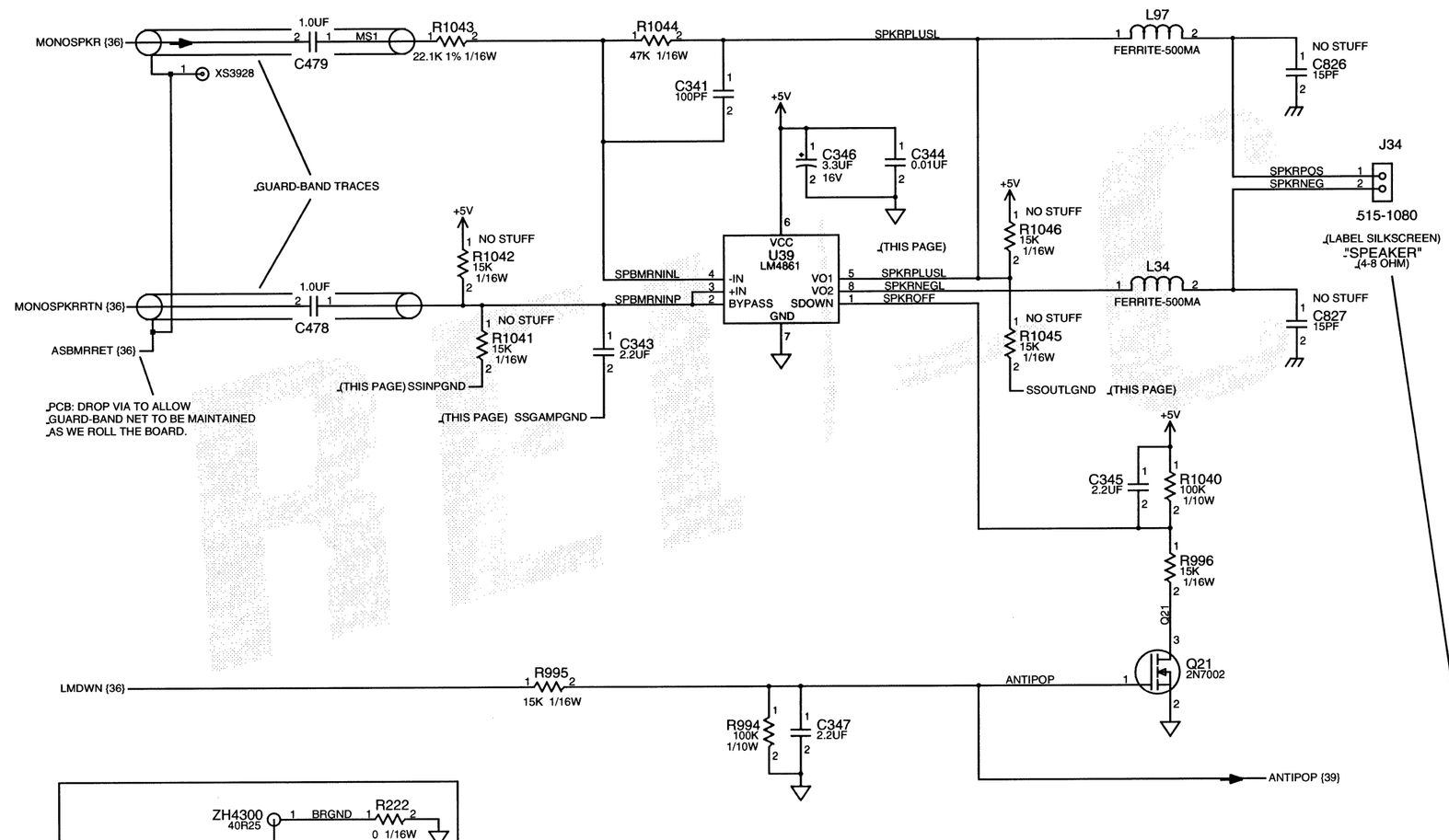

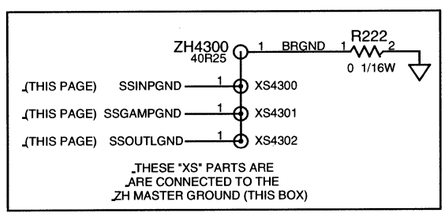

SPEAKER AUDIO STAR GROUND
(CONNECTION POINTS)

SPEAKER SUPPORT

PART NUMBER	QTY	DESCRIPTION	ASSOCIATED REFERENCE DESIGNATORS	BOM OPTION
609-0066	1	SPKR ASSY, YOSEMITE	J34	SPKR, ASSY YOSEMITE ENA
731-0062	1	SPKR, 8-OHM, 2W, 40x70MM	J34	SPKR, DRVR ENA

Mono Amp & Speaker Connector

NOTICE OF PROPRIETARY PROPERTY
THE INFORMATION CONTAINED HEREIN IS THE PROPRIETARY PROPERTY OF APPLE COMPUTER, INC. THE POSSESSOR AGREES TO THE FOLLOWING
(I) TO MAINTAIN THE DOCUMENT IN CONFIDENCE
(II) NOT TO REPRODUCE OR COPY IT
(III) NOT TO REVEAL OR PUBLISH IT IN WHOLE OR PART

ECS CAD GENERATED
APPLE CONFIDENTIAL

Apple Computer, Inc

SIZE	DRAWING NUMBER	REV.
D	051-0777	C

SCALE NONE

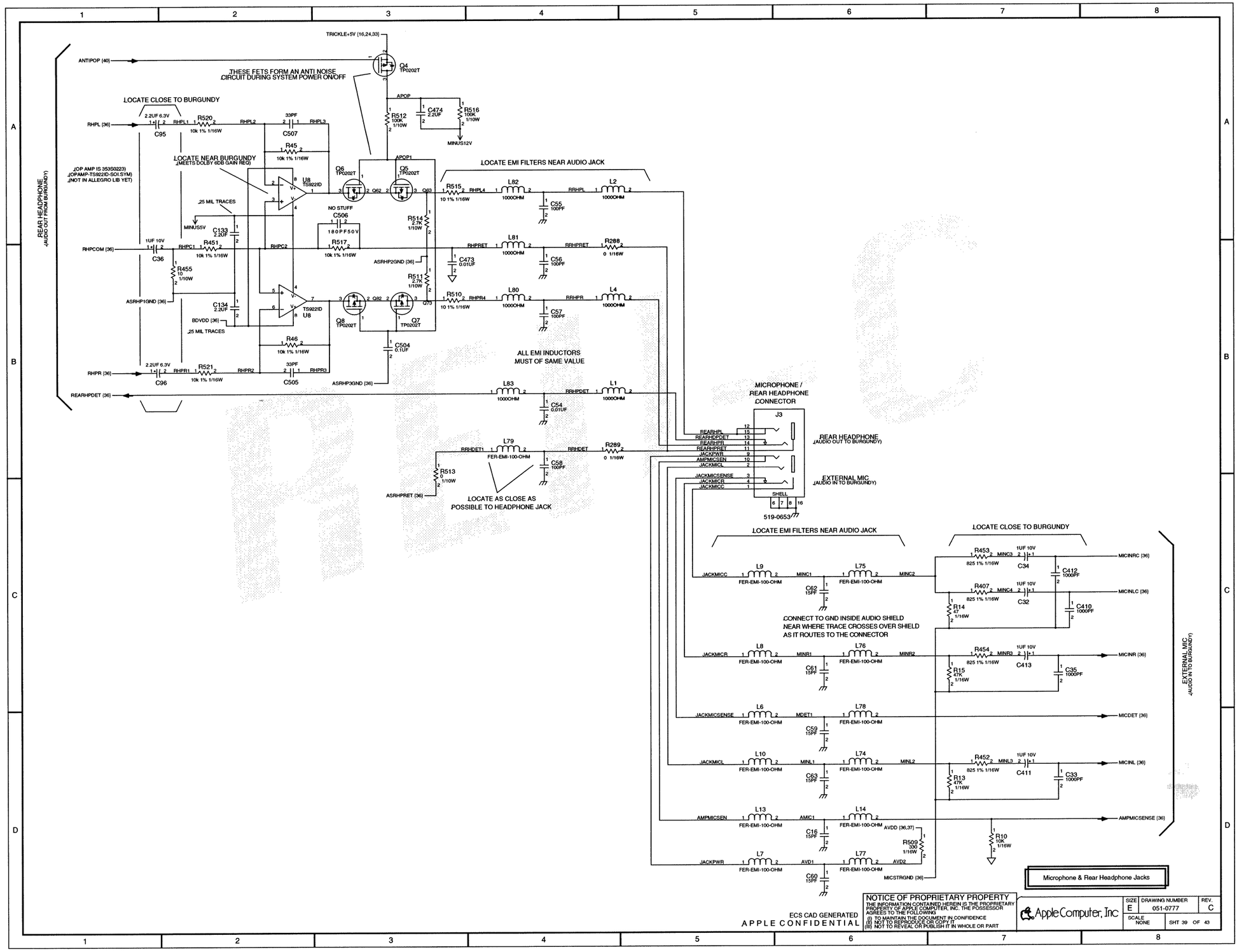
REAR HEADPHONE
(AUDIO OUT FROM BURGUNDY)
ANTIPOP [40]
TRICKLE+5V [16,24,33]
Q4 TP0202T
THESE FETS FORM AN ANTI NOISE CIRCUIT DURING SYSTEM POWER ON/OFF
LOCATE CLOSE TO BURGUNDY
RHPL [36]
C95
R520 10k 1% 1/16W
C507
R45 10k 1% 1/16W
LOCATE NEAR BURGUNDY
(MEETS DOLBY 6DB GAIN REQ)
(OP AMP IS 353S0223)
(OPAMP-TS922ID-SOI.SYM)
(NOT IN ALLEGRO LIB YET)
U8 TS922ID
Q6 TP0202T
Q5 TP0202T
APOP
R512 100K 1/10W
C474 2.2UF
R516 100K 1/10W
MINUS12V
LOCATE EMI FILTERS NEAR AUDIO JACK
R515 10 1% 1/16W
L82 1000OHM
L2 1000OHM
C55 100PF
.25 MIL TRACES
MINUS5V
C133 2.2UF
NO STUFF
C506 180PF50V
R514 2.7K 1/10W
RHPCOM [36]
C36
R451 10k 1% 1/16W
R517 10k 1% 1/16W
L81 1000OHM
R288 0 1/16W
C56 100PF
ASRHP2GND [36]
C473 0.01UF
R455 10 1/10W
R511 2.7K 1/10W
ASRHP1GND [36]
C134 2.2UF
BDVDD [36]
Q8 TP0202T
Q7 TP0202T
R510 10 1% 1/16W
L80 1000OHM
L4 1000OHM
C57 100PF
R46 10k 1% 1/16W
C504 0.1UF
ALL EMI INDUCTORS MUST OF SAME VALUE
RHPR [36]
C96
R521 10k 1% 1/16W
C505
ASRHP3GND [36]
REARHPDET [36]
L83 1000OHM
C54 0.01UF
L1 1000OHM
MICROPHONE / REAR HEADPHONE CONNECTOR
J3
REARHPL
REARHPDET
REARHPR
REARHPRET
JACKPWR
AMPMICSEN
JACKMICL
JACKMICSENSE
JACKMICR
JACKMICC
SHELL
519-0653
REAR HEADPHONE (AUDIO OUT TO BURGUNDY)
EXTERNAL MIC (AUDIO IN TO BURGUNDY)
L79 FER-EMI-100-OHM
R289 0 1/16W
C58 100PF
R513 0 1/10W
ASRHPRET [36]
LOCATE AS CLOSE AS POSSIBLE TO HEADPHONE JACK
LOCATE EMI FILTERS NEAR AUDIO JACK
LOCATE CLOSE TO BURGUNDY
R453 825 1% 1/16W
C34
C412 1000PF
MICINRC [36]
R407 825 1% 1/16W
C32
R14 47 1/16W
C410 1000PF
MICINLC [36]
CONNECT TO GND INSIDE AUDIO SHIELD NEAR WHERE TRACE CROSSES OVER SHIELD AS IT ROUTES TO THE CONNECTOR
L9 FER-EMI-100-OHM
C62 15PF
L75 FER-EMI-100-OHM
L8 FER-EMI-100-OHM
C61 15PF
L76 FER-EMI-100-OHM
R454 825 1% 1/16W
C413
R15 47K 1/16W
C35 1000PF
MICINR [36]
L6 FER-EMI-100-OHM
C59 15PF
L78 FER-EMI-100-OHM
MICDET [36]
L10 FER-EMI-100-OHM
C63 15PF
L74 FER-EMI-100-OHM
R452 825 1% 1/16W
C411
R13 47K 1/16W
C33 1000PF
MICINL [36]
L13 FER-EMI-100-OHM
C16 15PF
L14 FER-EMI-100-OHM
AVDD [36,37]
R509 330 1/16W
R10 10K 1/16W
AMPMICSENSE [36]
L7 FER-EMI-100-OHM
C60 15PF
L77 FER-EMI-100-OHM
MICSTRGND [36]
EXTERNAL MIC (AUDIO IN TO BURGUNDY)
Microphone & Rear Headphone Jacks
ECS CAD GENERATED
APPLE CONFIDENTIAL
NOTICE OF PROPRIETARY PROPERTY
THE INFORMATION CONTAINED HEREIN IS THE PROPRIETARY PROPERTY OF APPLE COMPUTER, INC. THE POSSESSOR AGREES TO THE FOLLOWING
(I) TO MAINTAIN THE DOCUMENT IN CONFIDENCE
(II) NOT TO REPRODUCE OR COPY IT
(III) NOT TO REVEAL OR PUBLISH IT IN WHOLE OR PART
Apple Computer, Inc
SIZE E
DRAWING NUMBER 051-0777
REV. C
SCALE NONE
SHT 39 OF 43

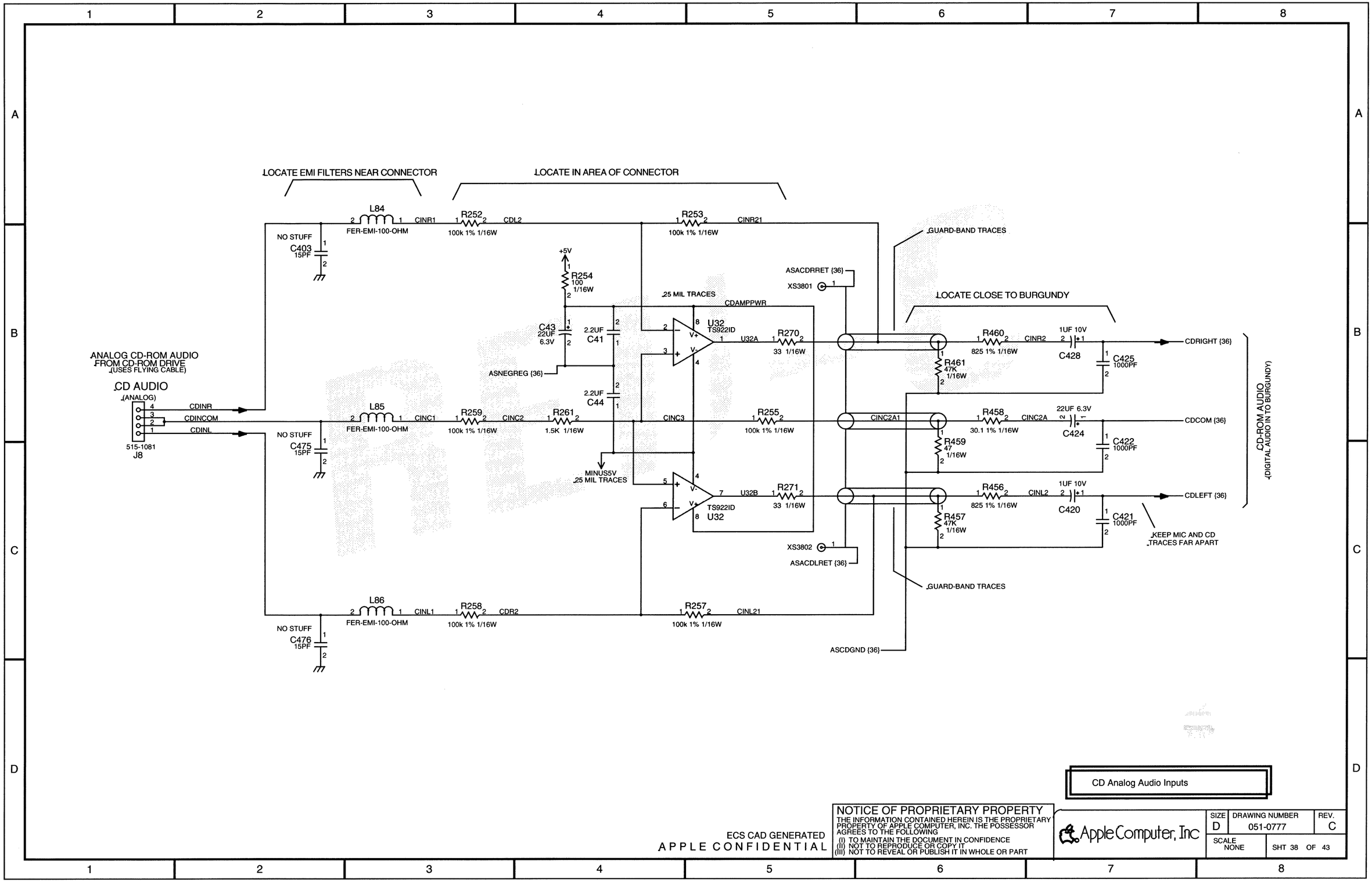

CD Analog Audio Inputs

ECS CAD GENERATED
APPLE CONFIDENTIAL

NOTICE OF PROPRIETARY PROPERTY
THE INFORMATION CONTAINED HEREIN IS THE PROPRIETARY PROPERTY OF APPLE COMPUTER, INC. THE POSSESSOR AGREES TO THE FOLLOWING
(I) TO MAINTAIN THE DOCUMENT IN CONFIDENCE
(II) NOT TO REPRODUCE OR COPY IT
(III) NOT TO REVEAL OR PUBLISH IT IN WHOLE OR PART

Apple Computer, Inc

SIZE	DRAWING NUMBER	REV.
D	051-0777	C
SCALE NONE	SHT 38 OF 43	

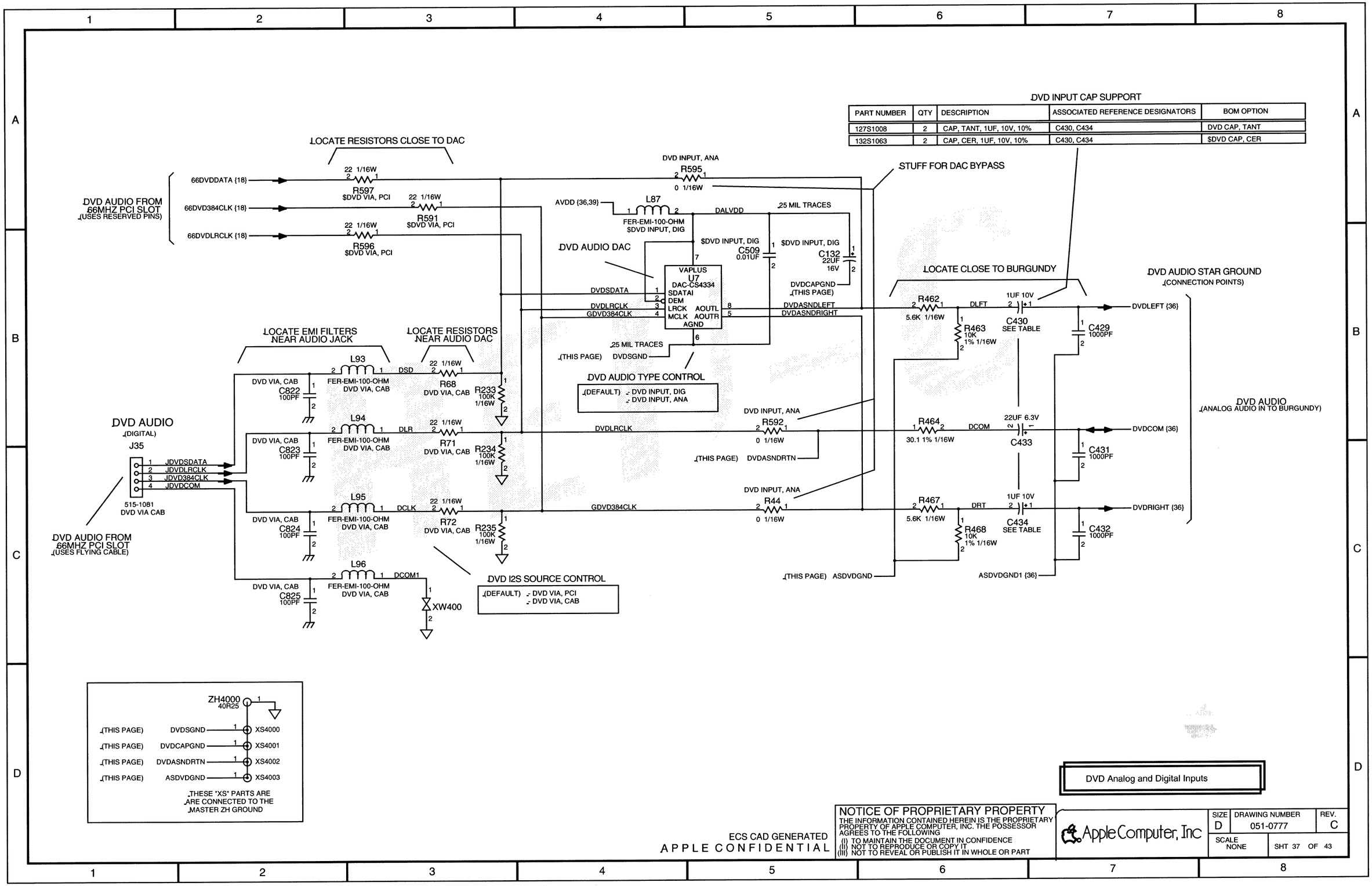
DVD INPUT CAP SUPPORT
PART NUMBER | QTY | DESCRIPTION | ASSOCIATED REFERENCE DESIGNATORS | BOM OPTION
127S1008 | 2 | CAP, TANT, 1UF, 10V, 10% | C430, C434 | DVD CAP, TANT
132S1063 | 2 | CAP, CER, 1UF, 10V, 10% | C430, C434 | $DVD CAP, CER
LOCATE RESISTORS CLOSE TO DAC
DVD AUDIO FROM 66MHZ PCI SLOT (USES RESERVED PINS)
66DVDDATA {18}
66DVD384CLK {18}
66DVDLRCLK {18}
R597 $DVD VIA, PCI
R591 $DVD VIA, PCI
R596 $DVD VIA, PCI
22 1/16W
DVD INPUT, ANA
R595 0 1/16W
STUFF FOR DAC BYPASS
AVDD {36,39}
L87 FER-EMI-100-OHM $DVD INPUT, DIG
DALVDD
25 MIL TRACES
$DVD INPUT, DIG
C509 0.01UF
C132 22UF 16V
DVD AUDIO DAC
VAPLUS U7 DAC-CS4334
SDATAI DEM LRCK MCLK AOUTL AOUTR AGND
DVDSDATA
DVDLRCLK
GDVD384CLK
DVDCAPGND (THIS PAGE)
DVDASNDLEFT
DVDASNDRIGHT
LOCATE CLOSE TO BURGUNDY
DVD AUDIO STAR GROUND (CONNECTION POINTS)
R462 5.6K 1/16W
DLFT
1UF 10V
C430 SEE TABLE
R463 10K 1% 1/16W
C429 1000PF
DVDLEFT {36}
LOCATE EMI FILTERS NEAR AUDIO JACK
LOCATE RESISTORS NEAR AUDIO DAC
L93 FER-EMI-100-OHM DVD VIA, CAB
DSD
R68 DVD VIA, CAB
R233 100K 1/16W
C822 100PF
25 MIL TRACES
(THIS PAGE) DVDSGND
DVD AUDIO TYPE CONTROL
(DEFAULT) - DVD INPUT, DIG
- DVD INPUT, ANA
DVD AUDIO (ANALOG AUDIO IN TO BURGUNDY)
DVD AUDIO (DIGITAL) J35
JDVDSDATA
JDVDLRCLK
JDVD384CLK
JDVDCOM
515-1081 DVD VIA CAB
L94 FER-EMI-100-OHM DVD VIA, CAB
DLR
R71 DVD VIA, CAB
R234 100K 1/16W
C823 100PF
DVDLRCLK
DVD INPUT, ANA
R592 0 1/16W
(THIS PAGE) DVDASNDRTN
R464 30.1 1% 1/16W
DCOM
22UF 6.3V
C433
C431 1000PF
DVDCOM {36}
DVD AUDIO FROM 66MHZ PCI SLOT (USES FLYING CABLE)
L95 FER-EMI-100-OHM DVD VIA, CAB
DCLK
R72 DVD VIA, CAB
R235 100K 1/16W
C824 100PF
GDVD384CLK
R44 0 1/16W
R467 5.6K 1/16W
DRT
C434 SEE TABLE
R468 10K 1% 1/16W
C432 1000PF
DVDRIGHT {36}
L96 FER-EMI-100-OHM DVD VIA, CAB
DCOM1
C825 100PF
XW400
DVD I2S SOURCE CONTROL
(DEFAULT) - DVD VIA, PCI
- DVD VIA, CAB
(THIS PAGE) ASDVDGND
ASDVDGND1 {36}
ZH4000 40R25
(THIS PAGE) DVDSGND XS4000
(THIS PAGE) DVDCAPGND XS4001
(THIS PAGE) DVDASNDRTN XS4002
(THIS PAGE) ASDVDGND XS4003
THESE "XS" PARTS ARE ARE CONNECTED TO THE MASTER ZH GROUND
DVD Analog and Digital Inputs
ECS CAD GENERATED
APPLE CONFIDENTIAL
NOTICE OF PROPRIETARY PROPERTY
THE INFORMATION CONTAINED HEREIN IS THE PROPRIETARY PROPERTY OF APPLE COMPUTER, INC. THE POSSESSOR AGREES TO THE FOLLOWING
(I) TO MAINTAIN THE DOCUMENT IN CONFIDENCE
(II) NOT TO REPRODUCE OR COPY IT
(III) NOT TO REVEAL OR PUBLISH IT IN WHOLE OR PART
Apple Computer, Inc
SIZE D
DRAWING NUMBER 051-0777
REV. C
SCALE NONE
SHT 37 OF 43

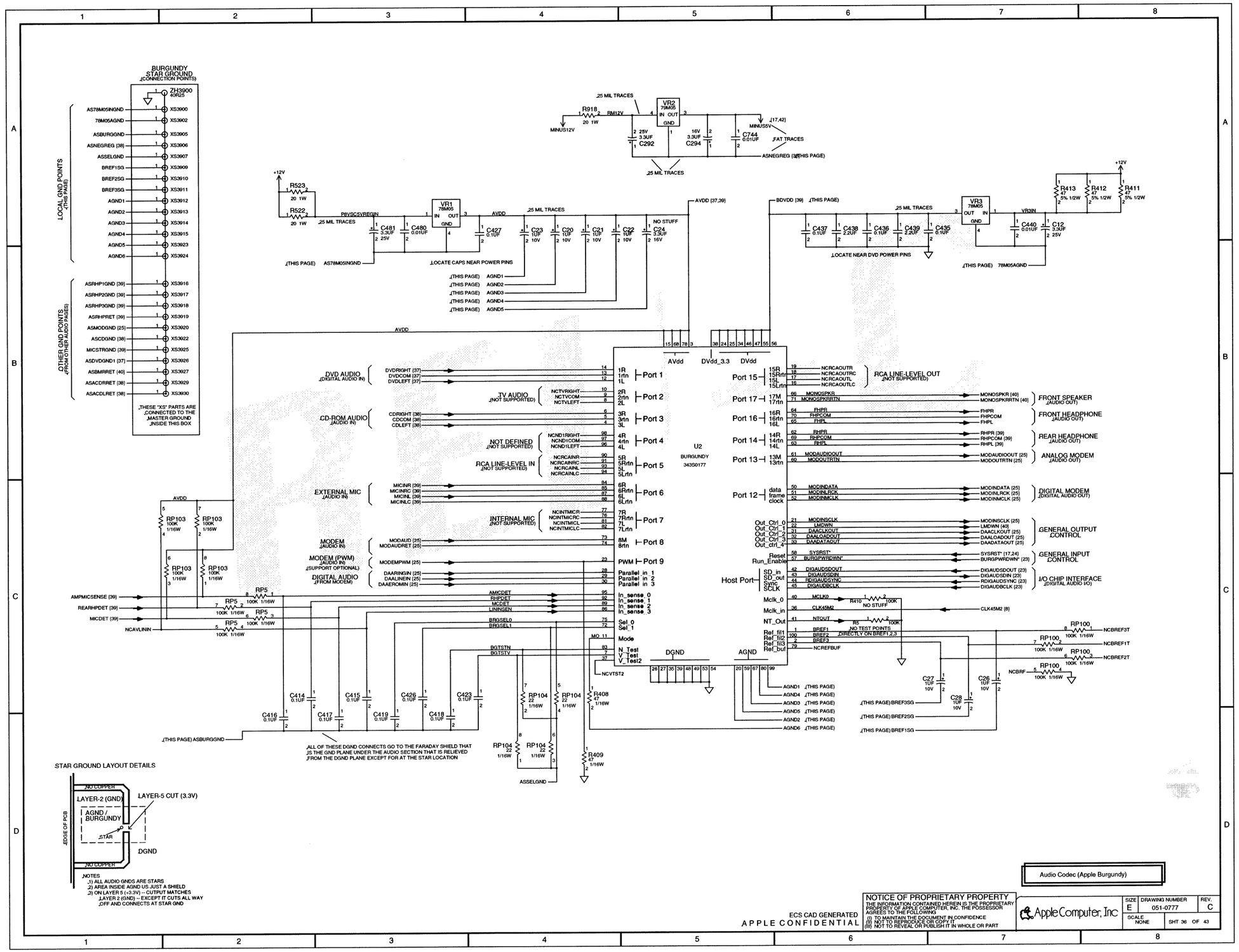

Audio Codec (Apple Burgundy)

ECS CAD GENERATED
APPLE CONFIDENTIAL

NOTICE OF PROPRIETARY PROPERTY
THE INFORMATION CONTAINED HEREIN IS THE PROPRIETARY PROPERTY OF APPLE COMPUTER, INC. THE POSSESSOR AGREES TO THE FOLLOWING
(I) TO MAINTAIN THE DOCUMENT IN CONFIDENCE
(II) NOT TO REPRODUCE OR COPY IT
(III) NOT TO REVEAL OR PUBLISH IT IN WHOLE OR PART

Apple Computer, Inc

SIZE	DRAWING NUMBER	REV.
E	051-0777	C
SCALE NONE	SHT 36 OF 43	

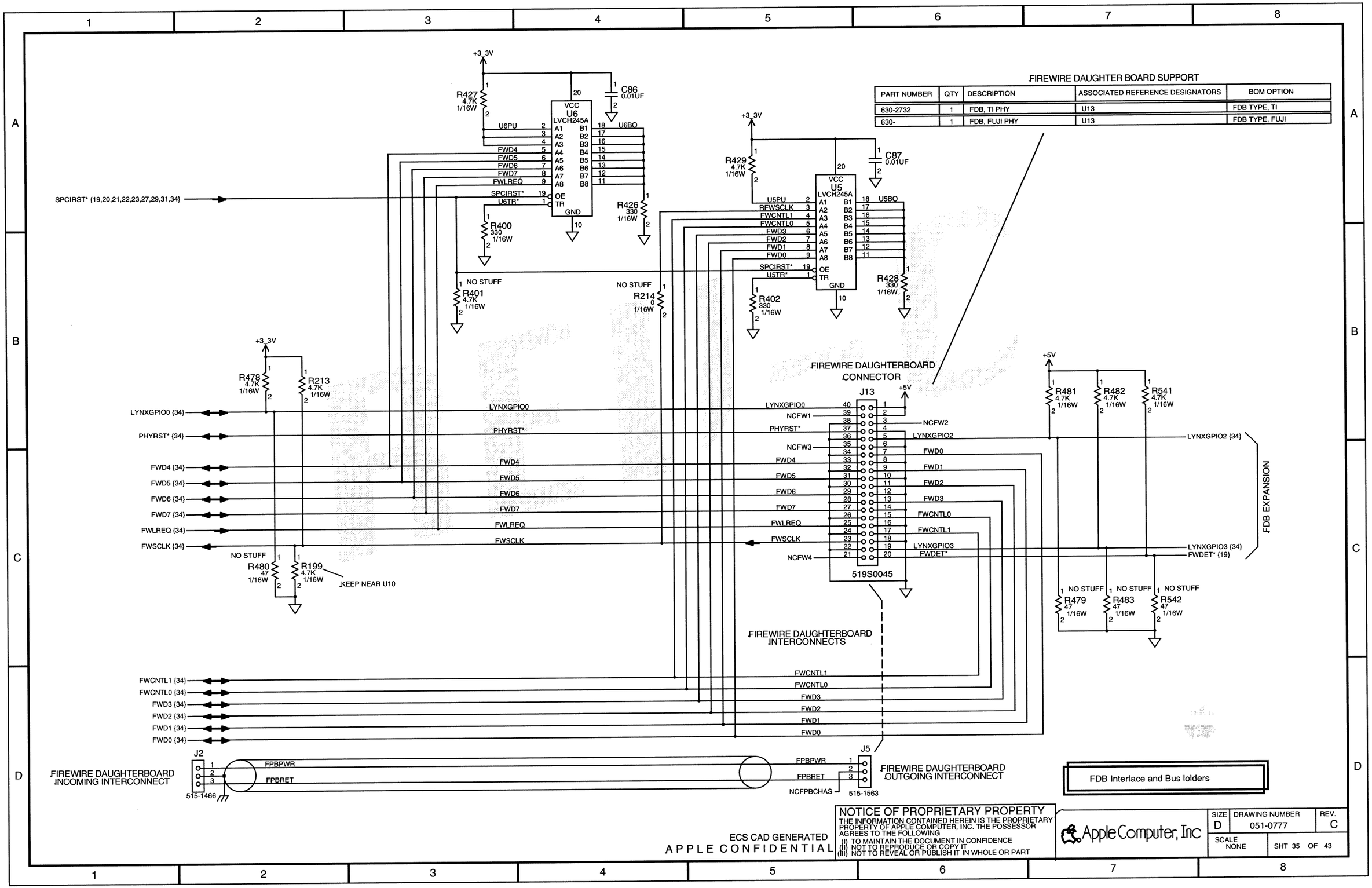
FIREWIRE DAUGHTER BOARD SUPPORT
PART NUMBER | QTY | DESCRIPTION | ASSOCIATED REFERENCE DESIGNATORS | BOM OPTION
630-2732 | 1 | FDB, TI PHY | U13 | FDB TYPE, TI
630- | 1 | FDB, FUJI PHY | U13 | FDB TYPE, FUJI
U6 LVCH245A
U5 LVCH245A
R427 4.7K 1/16W
C86 0.01UF
R426 330 1/16W
R400 330 1/16W
R401 4.7K 1/16W
R214 0 1/16W
R429 4.7K 1/16W
C87 0.01UF
R428 330 1/16W
R402 330 1/16W
SPCIRST* {19,20,21,22,23,27,29,31,34}
NO STUFF
FIREWIRE DAUGHTERBOARD CONNECTOR
J13
519S0045
R478 4.7K 1/16W
R213 4.7K 1/16W
R480 47 1/16W
R199 4.7K 1/16W
KEEP NEAR U10
R481 4.7K 1/16W
R482 4.7K 1/16W
R541 4.7K 1/16W
R479 47 1/16W
R483 47 1/16W
R542 47 1/16W
FDB EXPANSION
FIREWIRE DAUGHTERBOARD INTERCONNECTS
J2
515-1466
FIREWIRE DAUGHTERBOARD INCOMING INTERCONNECT
J5
515-1563
FIREWIRE DAUGHTERBOARD OUTGOING INTERCONNECT
FDB Interface and Bus Iolders
NOTICE OF PROPRIETARY PROPERTY
THE INFORMATION CONTAINED HEREIN IS THE PROPRIETARY PROPERTY OF APPLE COMPUTER, INC. THE POSSESSOR AGREES TO THE FOLLOWING
(I) TO MAINTAIN THE DOCUMENT IN CONFIDENCE
(II) NOT TO REPRODUCE OR COPY IT
(III) NOT TO REVEAL OR PUBLISH IT IN WHOLE OR PART
ECS CAD GENERATED
APPLE CONFIDENTIAL
Apple Computer, Inc
SIZE D
DRAWING NUMBER 051-0777
REV. C
SCALE NONE
SHT 35 OF 43

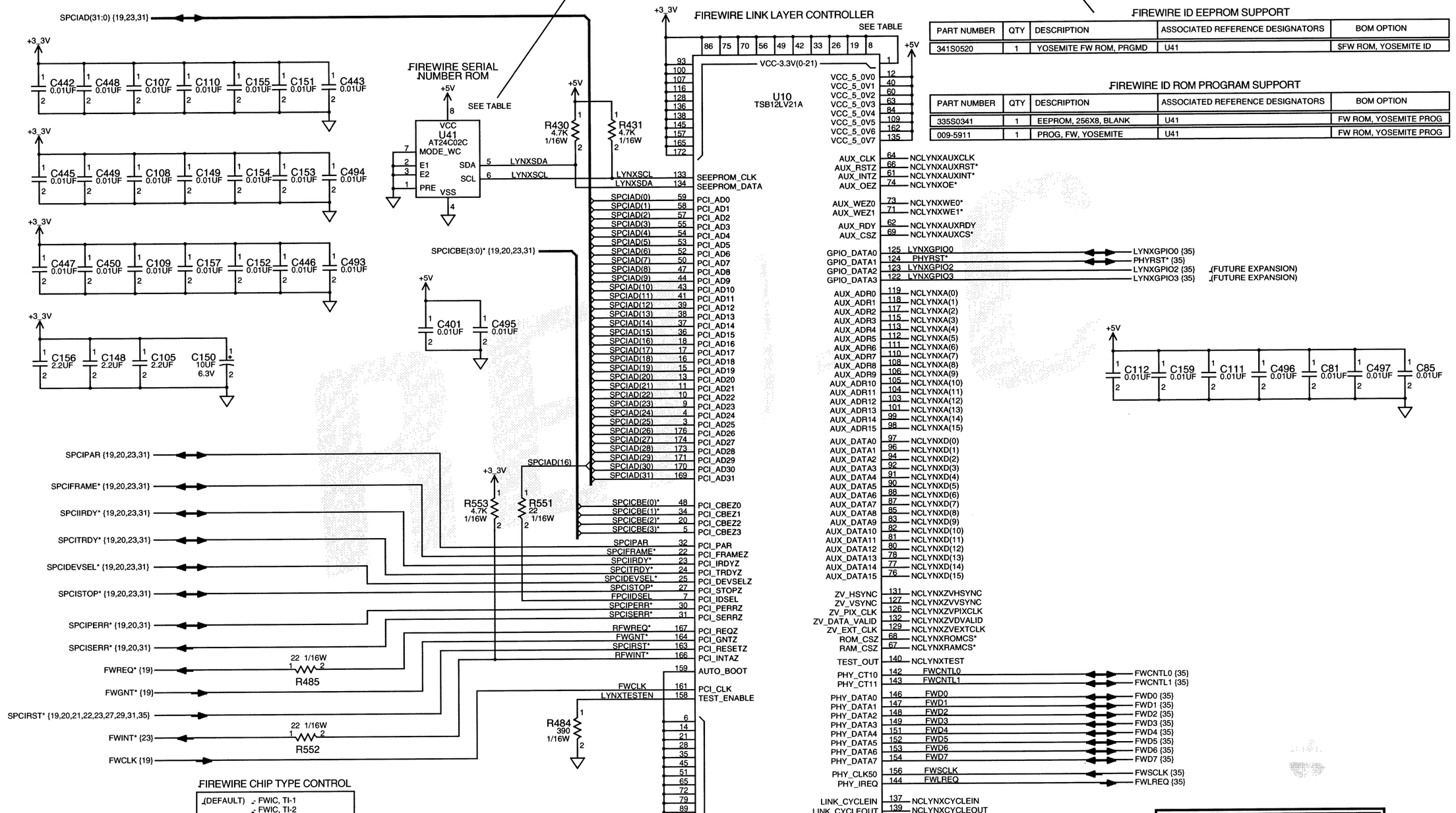

FIREWIRE ID EEPROM SUPPORT

PART NUMBER	QTY	DESCRIPTION	ASSOCIATED REFERENCE DESIGNATORS	BOM OPTION
341S0520	1	YOSEMITE FW ROM, PRGMD	U41	$FW ROM, YOSEMITE ID

FIREWIRE ID ROM PROGRAM SUPPORT

PART NUMBER	QTY	DESCRIPTION	ASSOCIATED REFERENCE DESIGNATORS	BOM OPTION
335S0341	1	EEPROM, 256X8, BLANK	U41	FW ROM, YOSEMITE PROG
009-5911	1	PROG, FW, YOSEMITE	U41	FW ROM, YOSEMITE PROG

FIREWIRE CHIP TYPE CONTROL

(DEFAULT) - FWIC, TI-1
- FWIC, TI-2

PART NUMBER	QTY	DESCRIPTION	ASSOCIATED REFERENCE DESIGNATORS	BOM OPTION
337S0003	1	IC, ASIC-176-PQFP, LYNX-1	U10	$FW IC, TI-1
337S0260	1	IC, ASIC-176-PQFP, LYNX-2	U10	FW IC, TI-2

FireWire Link Layer (TI Lynx)

NOTICE OF PROPRIETARY PROPERTY
THE INFORMATION CONTAINED HEREIN IS THE PROPRIETARY PROPERTY OF APPLE COMPUTER, INC. THE POSSESSOR AGREES TO THE FOLLOWING
(I) TO MAINTAIN THE DOCUMENT IN CONFIDENCE
(II) NOT TO REPRODUCE OR COPY IT
(III) NOT TO REVEAL OR PUBLISH IT IN WHOLE OR PART

Apple Computer, Inc

SIZE	DRAWING NUMBER	REV.
D	051-0777	C
SCALE NONE	SHT 34 OF 43	

ECS CAD GENERATED
APPLE CONFIDENTIAL

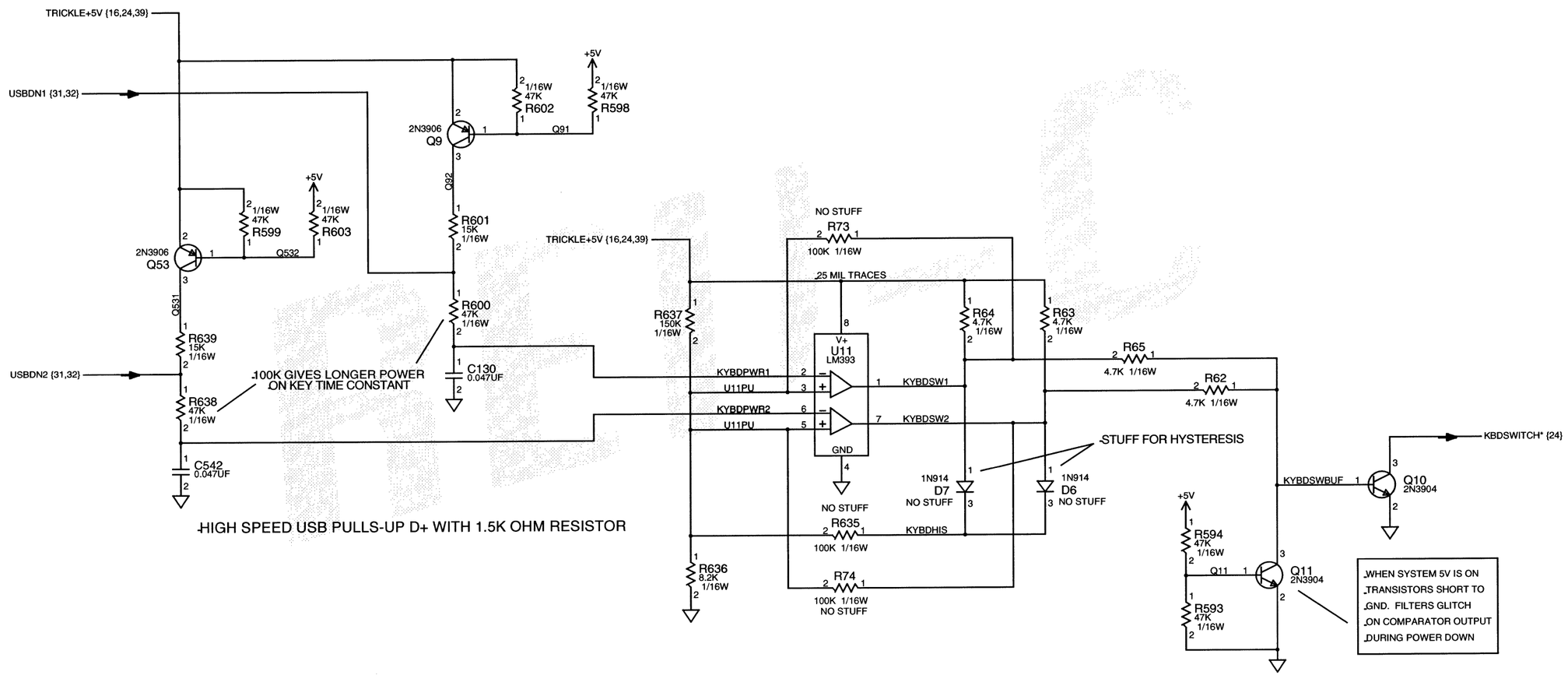

USB Soft Power-On

ECS CAD GENERATED
APPLE CONFIDENTIAL

NOTICE OF PROPRIETARY PROPERTY
THE INFORMATION CONTAINED HEREIN IS THE PROPRIETARY PROPERTY OF APPLE COMPUTER, INC. THE POSSESSOR AGREES TO THE FOLLOWING
(I) TO MAINTAIN THE DOCUMENT IN CONFIDENCE
(II) NOT TO REPRODUCE OR COPY IT
(III) NOT TO REVEAL OR PUBLISH IT IN WHOLE OR PART

Apple Computer, Inc

SIZE	DRAWING NUMBER	REV.
D	051-0777	C
SCALE NONE	SHT 33 OF 43	

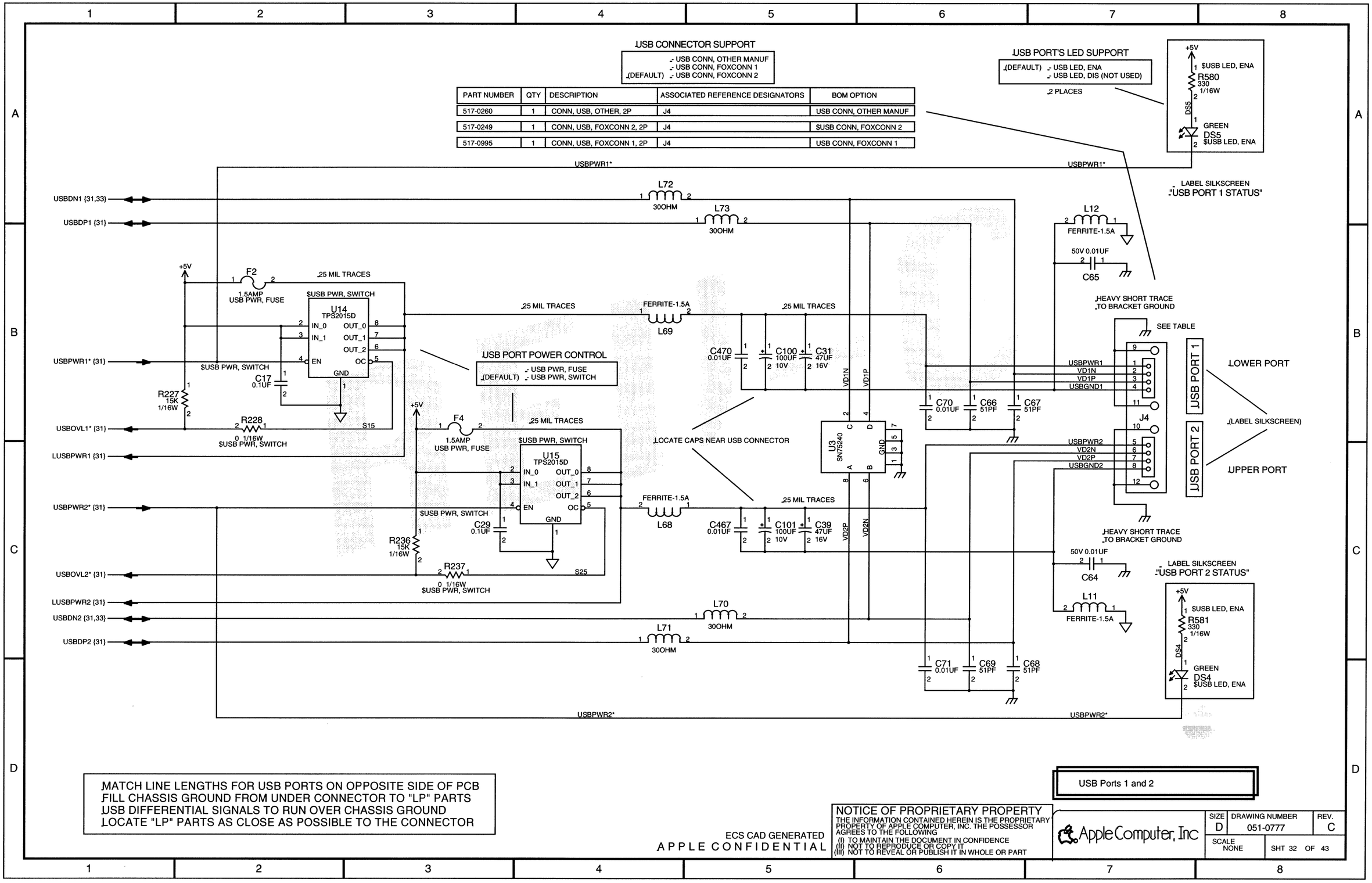

PART NUMBER	QTY	DESCRIPTION	ASSOCIATED REFERENCE DESIGNATORS	BOM OPTION
517-0260	1	CONN, USB, OTHER, 2P	J4	USB CONN, OTHER MANUF
517-0249	1	CONN, USB, FOXCONN 2, 2P	J4	$USB CONN, FOXCONN 2
517-0995	1	CONN, USB, FOXCONN 1, 2P	J4	USB CONN, FOXCONN 1

MATCH LINE LENGTHS FOR USB PORTS ON OPPOSITE SIDE OF PCB
FILL CHASSIS GROUND FROM UNDER CONNECTOR TO "LP" PARTS
USB DIFFERENTIAL SIGNALS TO RUN OVER CHASSIS GROUND
LOCATE "LP" PARTS AS CLOSE AS POSSIBLE TO THE CONNECTOR

USB Ports 1 and 2

ECS CAD GENERATED
APPLE CONFIDENTIAL

NOTICE OF PROPRIETARY PROPERTY
THE INFORMATION CONTAINED HEREIN IS THE PROPRIETARY PROPERTY OF APPLE COMPUTER, INC. THE POSSESSOR AGREES TO THE FOLLOWING
(I) TO MAINTAIN THE DOCUMENT IN CONFIDENCE
(II) NOT TO REPRODUCE OR COPY IT
(III) NOT TO REVEAL OR PUBLISH IT IN WHOLE OR PART

Apple Computer, Inc

SIZE	DRAWING NUMBER	REV.
D	051-0777	C
SCALE NONE	SHT 32 OF 43	

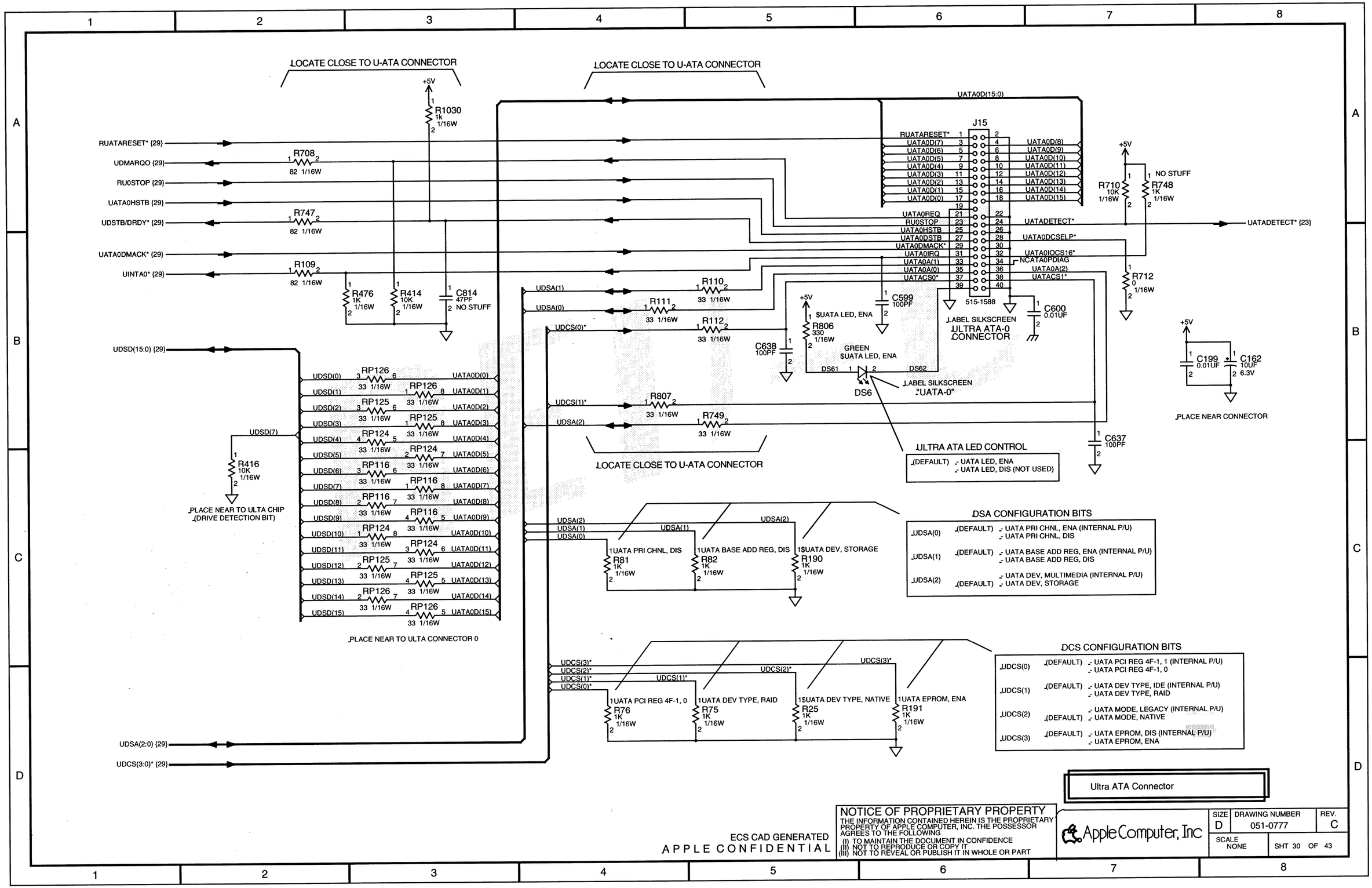
LOCATE CLOSE TO U-ATA CONNECTOR
LOCATE CLOSE TO U-ATA CONNECTOR
+5V
R1030 1K 1/16W
RUATARESET* {29}
UDMARQO {29}
RU0STOP {29}
UATA0HSTB {29}
UDSTB/DRDY* {29}
UATA0DMACK* {29}
UINTA0* {29}
R708 82 1/16W
R747 82 1/16W
R109 82 1/16W
R476 1K 1/16W
R414 10K 1/16W
C814 47PF NO STUFF
UDSD(15:0) {29}
UDSD(7)
R416 10K 1/16W
PLACE NEAR TO ULTA CHIP (DRIVE DETECTION BIT)
RP126 33 1/16W
RP125 33 1/16W
RP124 33 1/16W
RP116 33 1/16W
UDSD(0) UDSD(1) UDSD(2) UDSD(3) UDSD(4) UDSD(5) UDSD(6) UDSD(7) UDSD(8) UDSD(9) UDSD(10) UDSD(11) UDSD(12) UDSD(13) UDSD(14) UDSD(15)
UATA0D(0) UATA0D(1) UATA0D(2) UATA0D(3) UATA0D(4) UATA0D(5) UATA0D(6) UATA0D(7) UATA0D(8) UATA0D(9) UATA0D(10) UATA0D(11) UATA0D(12) UATA0D(13) UATA0D(14) UATA0D(15)
PLACE NEAR TO ULTA CONNECTOR 0
UDSA(1) UDSA(0) UDCS(0)* UDCS(1)* UDSA(2)
R110 33 1/16W
R111 33 1/16W
R112 33 1/16W
R807 33 1/16W
R749 33 1/16W
C638 100PF
LOCATE CLOSE TO U-ATA CONNECTOR
UATA0D(15:0)
J15
515-1588
RUATARESET* UATA0D(7) UATA0D(6) UATA0D(5) UATA0D(4) UATA0D(3) UATA0D(2) UATA0D(1) UATA0D(0)
UATA0D(8) UATA0D(9) UATA0D(10) UATA0D(11) UATA0D(12) UATA0D(13) UATA0D(14) UATA0D(15)
UATA0REQ RU0STOP UATA0HSTB UATA0DSTB UATA0DMACK* UATA0IRQ UATA0A(1) UATA0A(0) UATACS0*
UATADETECT* UATA0DCSELP* UATA0IOCS16* NCATA0PDIAG UATA0A(2) UATACS1*
UATADETECT* {23}
R710 10K 1/16W
R748 1K 1/16W NO STUFF
R712 0 1/16W
C599 100PF
C600 0.01UF
$UATA LED, ENA
R806 330 1/16W
GREEN $UATA LED, ENA
DS61 DS62
DS6
LABEL SILKSCREEN "UATA-0"
LABEL SILKSCREEN ULTRA ATA-0 CONNECTOR
C199 0.01UF
C162 10UF 6.3V
PLACE NEAR CONNECTOR
C637 100PF
ULTRA ATA LED CONTROL
(DEFAULT) - UATA LED, ENA
- UATA LED, DIS (NOT USED)
DSA CONFIGURATION BITS
UDSA(0) (DEFAULT) - UATA PRI CHNL, ENA (INTERNAL P/U)
- UATA PRI CHNL, DIS
UDSA(1) (DEFAULT) - UATA BASE ADD REG, ENA (INTERNAL P/U)
- UATA BASE ADD REG, DIS
UDSA(2) (DEFAULT) - UATA DEV, MULTIMEDIA (INTERNAL P/U)
- UATA DEV, STORAGE
1UATA PRI CHNL, DIS R81 1K 1/16W
1UATA BASE ADD REG, DIS R82 1K 1/16W
1$UATA DEV, STORAGE R190 1K 1/16W
UDCS(3)* UDCS(2)* UDCS(1)* UDCS(0)*
1UATA PCI REG 4F-1, 0 R76 1K 1/16W
1UATA DEV TYPE, RAID R75 1K 1/16W
1$UATA DEV TYPE, NATIVE R25 1K 1/16W
1UATA EPROM, ENA R191 1K 1/16W
DCS CONFIGURATION BITS
UDCS(0) (DEFAULT) - UATA PCI REG 4F-1, 1 (INTERNAL P/U)
- UATA PCI REG 4F-1, 0
UDCS(1) (DEFAULT) - UATA DEV TYPE, IDE (INTERNAL P/U)
- UATA DEV TYPE, RAID
UDCS(2) (DEFAULT) - UATA MODE, LEGACY (INTERNAL P/U)
- UATA MODE, NATIVE
UDCS(3) (DEFAULT) - UATA EPROM, DIS (INTERNAL P/U)
- UATA EPROM, ENA
UDSA(2:0) {29}
UDCS(3:0)* {29}
Ultra ATA Connector
NOTICE OF PROPRIETARY PROPERTY
THE INFORMATION CONTAINED HEREIN IS THE PROPRIETARY PROPERTY OF APPLE COMPUTER, INC. THE POSSESSOR AGREES TO THE FOLLOWING
(I) TO MAINTAIN THE DOCUMENT IN CONFIDENCE
(II) NOT TO REPRODUCE OR COPY IT
(III) NOT TO REVEAL OR PUBLISH IT IN WHOLE OR PART
ECS CAD GENERATED
APPLE CONFIDENTIAL
Apple Computer, Inc
SIZE D
DRAWING NUMBER 051-0777
REV. C
SCALE NONE
SHT 30 OF 43

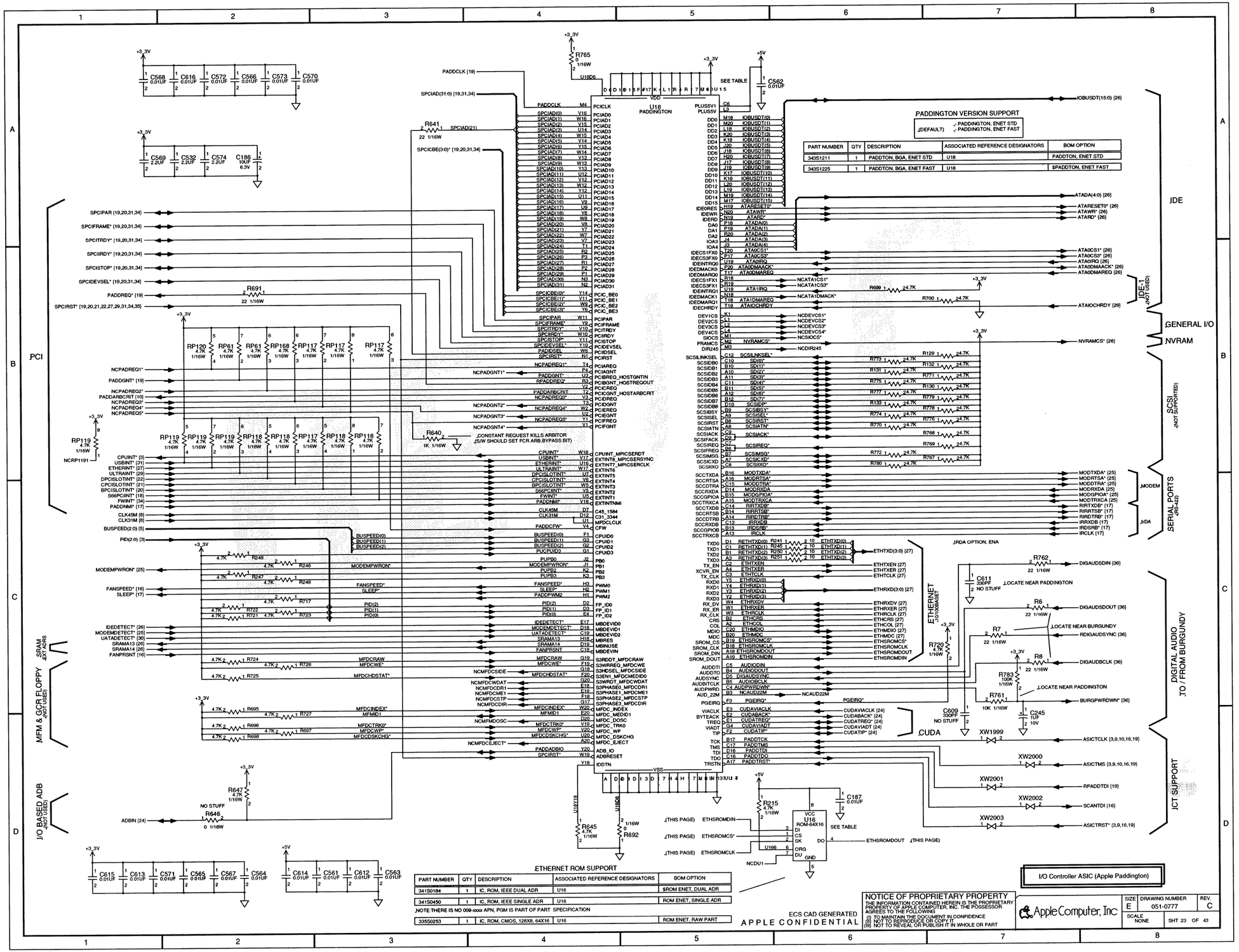

PART NUMBER	QTY	DESCRIPTION	ASSOCIATED REFERENCE DESIGNATORS	BOM OPTION
343S1211	1	PADDTON, BGA, ENET STD	U18	PADDTON, ENET STD
343S1225	1	PADDTON, BGA, ENET FAST	U18	$PADDTON, ENET FAST

PART NUMBER	QTY	DESCRIPTION	ASSOCIATED REFERENCE DESIGNATORS	BOM OPTION
341S0184	1	IC, ROM, IEEE DUAL ADR	U16	$ROM ENET, DUAL ADR
341S0450	1	IC, ROM, IEEE SINGLE ADR	U16	ROM ENET, SINGLE ADR
NOTE:THERE IS NO 009-xxxx APN, PGM IS PART OF PART SPECIFICATION				
335S0253	1	IC, ROM, CMOS, 128X8, 64X16	U16	ROM ENET, RAW PART