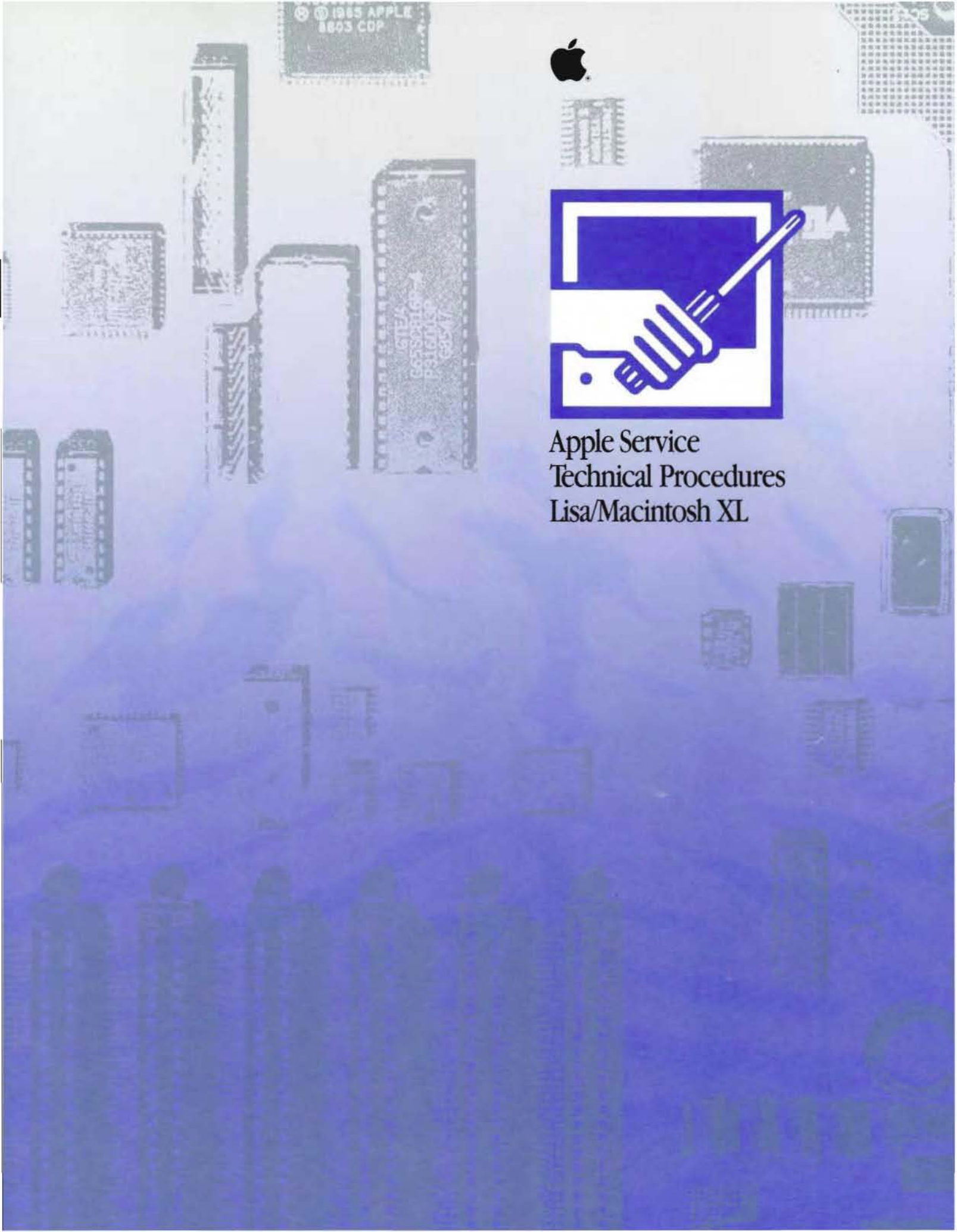

Apple Service Technical Procedures Lisa/Macintosh XL

Lisa Level I

Technical Procedures

#072-0085

Copyright 1983 by Apple Computer, Inc.

Revision: October 1984

LISA TECHNICAL PROCEDURES MANUAL

Volume Table of Contents

June 1986

Lisa 1.0	
--Table of Contents	8/83
--Take-Apart	7/83
--Setup	7/83
--Video Take-Apart	7/83
(except pages 3.9, 3.10)	12/83
--Video Take-Apart Chart	no date
--Video Adjustments	8/83
--Diagnostics	7/83
(except page 5.3)	01/85
--Troubleshooting	8/83
(except pages 6.1, 6.4, 6.7, 6.8, 6.12, 6.13, 6.24, 6.30-6.32)	4/84
(except pages 6.6, 6.15, 6.19-6.22, 6.26, 6.33-6.41, 6.45, 6.46, 6.48, 6.50, 6.52)	1/84
Lisa 2/Macintosh XL	
--Table of Contents	6/86
--General Information	6/86
--Take-Apart	12/83
--HDA Packaging for Shipment	3/85
--Video Take-Apart	2/84
(except pages 3.1,3.8-3.11, 3.17, 3.18)	5/86
--Video Adjustments	2/84
(except page 4.12)	5/86
--Diagnostics	9/85
(except pages 5.1, 5.2, 5.3)	5/86
(except page 5.2.1)	6/86
--Troubleshooting	4/86
(except pages 6.5, 6.6, 6.7, 6.18)	6/86
(except pages 6.9, 6.19, 6.32	5/86
Upgrade and Retrofit	
--Table of Contents	8/85
--Lisa 2/5 Inventory Upgrade Instructions	1/84
--Lisa 2 Upgrade	2/84
--Lisa 2/10 Upgrade	4/84
(except page 7)	10/84
--Macintosh XL Screen Modification Kit	8/85
(except pages 4.1, 4.2, 4.3)	10/85
(except pages 4.13)	9/85
Illustrated Parts Lists	
--Table of Contents	4/85
--Lisa 1.0 Illustrated Parts	4/85
(except pages 1.3, 1.14, 1.16)	6/85
--Lisa 2 Illustrated Parts	4/85
(except pages 2.3, 2.5, 2.20)	6/85
(except pages 2.7, 2.8, 2.17, 2.18, 2.21)	7/85
(except page 2.22)	4/86
--Macintosh XL Illustrated Parts	4/85
(except pages 3.3, 3.5, 3.20)	6/85
(except pages 3.7-3.10, 3.17, 3.18, 3.21)	7/85
(except page 3.22)	4/86

SERVICE AND SUPPORT NOTICE

THE FOLLOWING TECHNICAL PROCEDURE UPDATES ARE INCLUDED IN THE MAY LISA/MACINTOSH XL TECHNICAL PROCEDURES MAILING

LISA/MACINTOSH XL TECHNICAL PROCEDURES MANUAL

Lisa 2/Macintosh XL

Video Take-Apart - We have added modified system information to the CRT and Video Board replacements sections. Remove and replace procedures for the Screen Kit Transformer have been added.

Video Adjustments - we have added a reference on where to find procedures for height and width adjustments on modified systems.

Diagnostics - added screen kit and ROM configuration information.

Troubleshooting - The Lisa Lite Adaptor has had a name change to the Lisa Drive Adaptor Card. We have identified the most current diagnostic diskettes and when and how to use them. Information was also added to "How to Repair a Crashed Disk".

SERVICE AND SUPPORT NOTICE

THE FOLLOWING TECHNICAL PROCEDURE UPDATES ARE INCLUDED IN THE JUNE LISA/MACINTOSH XL TECHNICAL PROCEDURES MAILING

LISA/MACINTOSH XL TECHNICAL PROCEDURES MANUAL

Lisa 2/Macintosh XL

General Information - A new tab and section has been added to the Lisa 2/Macintosh XL section. This section includes information on system configurations for the Lisa 2, 2/5 and the XL (2/10), as well as the Modified Lisa 2/5 and Modified Macintosh XL. It contains peripheral configurations for printers and some basic troubleshooting and diagnostic tips. At the end of the section you will find some useful information on different types of error codes and their definitions.

Diagnostics & Troubleshooting - Some minor corrections have been made to these section.

LISA TECHNICAL PROCEDURES

TABLE OF CONTENTS

Section 1: Take-Apart

Introduction.....1.3
Replacing the Disk Drives.....1.4
Removing a Diskette from a Malfunctioning Disk Drive...1.5
The Glare Filter.....1.6
The Mouse.....1.7
The Keyboard.....1.7
Replacing a CPU Board: Transferring the Video State Machine ROM.....1.8
Packing Instructions.....1.9

Section 2: Setup

Introduction.....2.3
Material Requirements.....2.3
A. Unboxing the Lisa.....2.5
B. Installing the Pull-out Reference Cards.....2.5
C. Checking the Battery Switch.....2.6
D. Installing the Lisa Accessories.....2.7
E. Installing the ProFile.....2.8
F. Installing the Office System Software.....2.9
G. Pulling the Icons in Order.....2.13
H. Installing an Apple Daisy Wheel Printer.....2.17
I. Installing an Apple Dot matrix Printer.....2.18
J. Setting Preferences.....2.19
K. Setting the Clock.....2.20
L. Testing the System: Printing a Document.....2.20
M. Before You leave: Getting the User Started.....2.21

Appendix 1: Replacing a Single Tool on the ProFile.....2.22
Appendix 2: Setup Checklist.....2.23

©Apple Computer, Inc., 1985, 1986, 1987.
No part of this document may be reproduced in any form without the written permission of Apple Computer, Inc.

Macintosh is a trademark of Apple Computer, Inc.
Apple, Lisa, and the Apple logo are registered trademarks of Apple Computer, Inc.

Section 3: Video Take-apart

Safety Precautions.....3.2
Discharging the CRT.....3.5
Removing the CRT.....3.9
Installing the CRT.....3.10
Removing the Video Board.....3.11
Replacing the Video Board.....3.11
Removing the Flyback Transformer.....3.13
Replacing The Flyback Transformer.....3.13
Removing the Disk Drive Cable Assenbly.....3.14
Locating the Power-Supply-to-Card-Cage Assembly.....3.15
Disposing of the Cathode-Ray Tube (CRT).....3.16

Section 4: Video Adjustments

Introduction.....4.3
Tools and Equipment Needed.....4.3
Accessing the Video Assembly and the Test Patterns.....4.4
Summary: Problems and Corrections.....4.5
Horizontal Phase Adjustment.....4.7
Brightness and Contrast Adjustments.....4.8
Calling up the Video Grid Pattern.....4.9
Yoke Adjustment.....4.10
Height, Width, Vertical Linearity Trimpots
and Centering Rings.....4.11
Magnet Adjustments.....4.12
Finishing Up.....4.13

Section 5: Diagnostics

Interpreting the Boot ROM.....5.3
Using LisaTest.....5.3
Setting Diagnostic Controls.....5.4
Running a Complete System Check.....5.4
Running Individual Tests.....5.4
Brief Descriptions of Tests.....5.5

apple computer

Lisa Technical Procedures

Section 1

Take-Apart

Contents:

Introduction.....1.3
Replacing the Disk Drives.....1.4
Removing a Diskette from a Malfunctioning Disk Drive...1.5
The Glare Filter.....1.6
The Mouse.....1.7
The Keyboard.....1.7
Replacing a CPU Board: Transferring the Video State Machine ROM.....1.8
Packing Instructions.....1.9

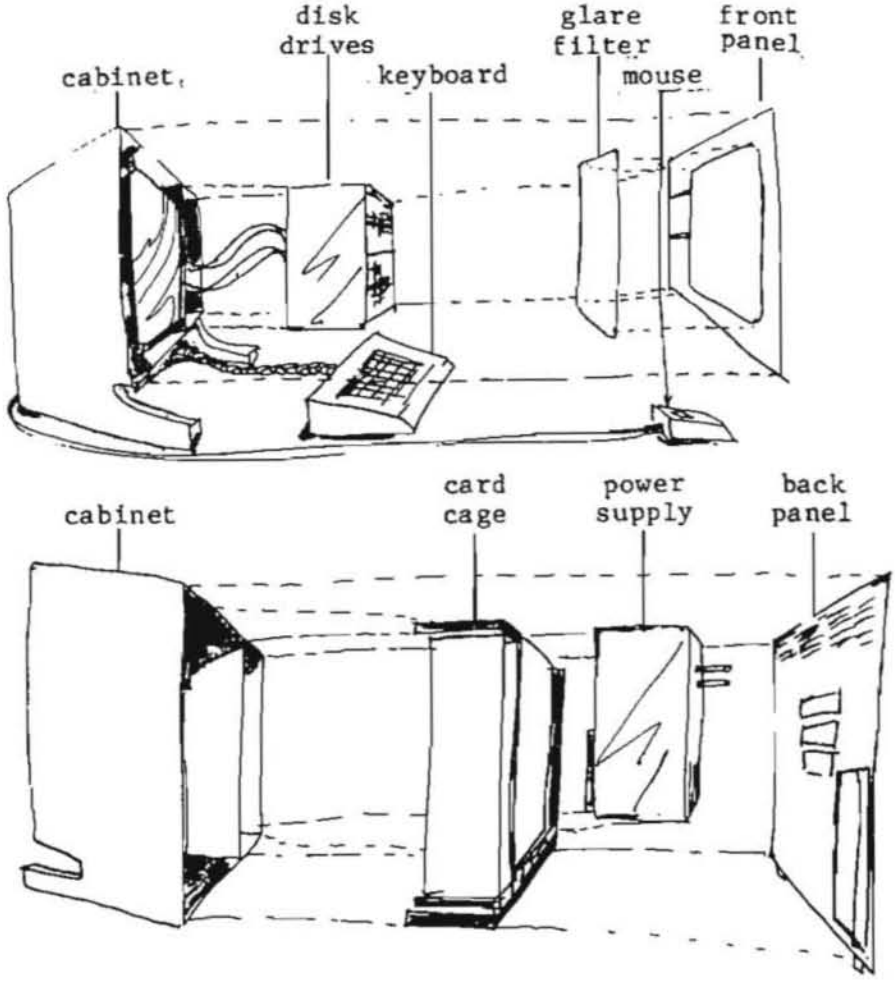

Lisa, Exploded View

INTRODUCTION

Lisa has been designed so that users can do most of the servicing themselves, by removing and replacing faulty parts and by installing their own expansion cards. All the basic removal/replacement tasks are extremely easy, require no tools, and are described in the Service Section of the Lisa Owner's Guide. If you are new to Lisa service, use that section to guide you in taking a Lisa apart before you read further.

This section of the Technical Procedures contains take-apart procedures not found in the Owner's Guide, including removing a single disk drive from the set of two, retrieving a diskette from a malfunctioning drive, and transferring the Video State Machine ROM (6309 chip) from the old CPU board to the new board when replacing the CPU board.

REPLACING THE DISK DRIVES

The disk drive assembly consists of the following components:

Drive carrier	P/N 805-4014
Drive carrier shelf	P/N 805-4013
Disk drives (2)	P/N 653-6110

The Drive carrier is the metal casing that holds the two drives. The carrier shelf is the metal shelf that supports the top drive. The upper and lower disk drives are identical.

To replace the bottom drive, remove the four Phillips screws on the underside of the assembly and slide the drive out. Simply slide the new drive in, screw it down, and reinsert the assembly into the Lisa.

To replace the top drive, remove the six Phillips screws that hold the carrier shelf in the middle of the assembly (three on each side). Grasp the drive by one of its metal ledges and slide drive and shelf out of the carrier. Then remove the four Phillips screws from the bottom of the carrier shelf and transfer the shelf to the new drive.

Test the new drives with the LisaTest disk test before returning the unit to the customer.

apple computer

REMOVING A DISKETTE FROM A MALFUNCTIONING DRIVE

If a drive malfunctions and locks onto a diskette, you will have to try to retrieve the diskette for the customer. Use the following method.

1. First, with the Lisa on, push the disk release button.

2. If the drive does not eject the diskette, turn the Lisa off; the diskette should be ejected as part of the power-down operations.

3. If the diskette is still stuck in the drive, turn off the Lisa and transfer the drives into a known-good Lisa. Then try pushing the disk release button and powering off.

If all these methods fail, you will have to force apart the jaws of the drive as follows:

1. Locate the black plastic arm attached to a spring (rear of drive, beneath the analog card).

2. Gently push down on the arm while pulling the diskette out the front of the drive. BE CAREFUL: Too much force will snap the arm right off.

apple computer

INSTALLING AND REMOVING THE GLARE FILTER

The glare filter is only needed when lighting conditions make the video screen hard to read. The glare filter will come with the Lisa accessories. You will not be expected to install it for the customer, but you should know how to install it, in case a customer needs help.

To Install:

1. Place the front panel of the Lisa face down on a flat surface.

2. Hold the glare filter so that the beveled side of the border is facing down. Place one long edge of the filter along the upper edge of the front panel, so that it slides under the small metal clip at the center of the frame.

3. Push the filter down so that it lies flat on the front panel, and flex the lower edge until it slides under the lower metal clip.

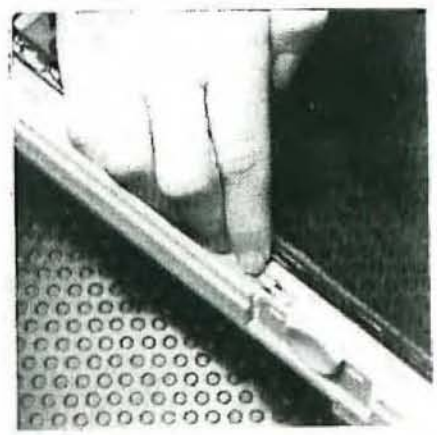

To Remove:

1. Push the frame of the glare filter out from under the metal clip at the bottom center of the frame.

2. Grasp the frame by the lower edge, and lift the lower edge up until the top edge pops out from beneath the upper clip.

apple computer

REMOVING AND REPLACING THE MOUSE

The mouse cord should be attached to its socket on the back of the Lisa. If it is not attached, simply center the connector on the socket and push it in.

Removing it is more difficult, because if it is done incorrectly, you may cause the mouse socket to break off. Remove it as follows:

1. With one finger on either side of the mouse plug, squeeze in on the soft plastic surrounding the connector.

   IMPORTANT: You **must** squeeze the sides of the connector while unplugging it, or you may damage the socket.

2. Pull the cord free from the socket.

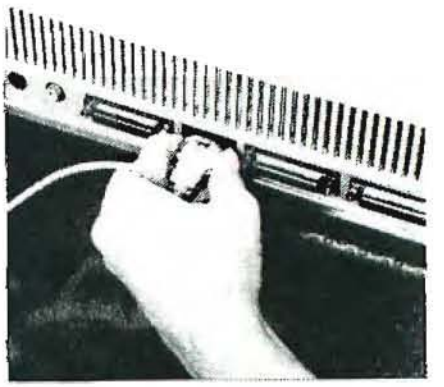

CONNECTING AND DISCONNECTING THE KEYBOARD

The keyboard plugs into the Lisa just under the ON-OFF button on the front of the chassis (under the disk drives). To disconnect it, simply pull on the rubber connector, as close as possible to the head of the connector. To connect it, just push the connector into its socket.

INSTALLING A NEW CPU BOARD: TRANSFERRING THE VIDEO STATE MACHINE ROM

The Video State Machine ROM (6309 chip) is found at position C6 on the CPU board (see Figure 1, below). This ROM contains the serial number of the Lisa, which is used as its address for any network applications. This chip is also used in the software protection system. Whenever you change the CPU board on a Lisa, you must transfer this chip from the old board to the new board; otherwise the user's software will not run on the Lisa.

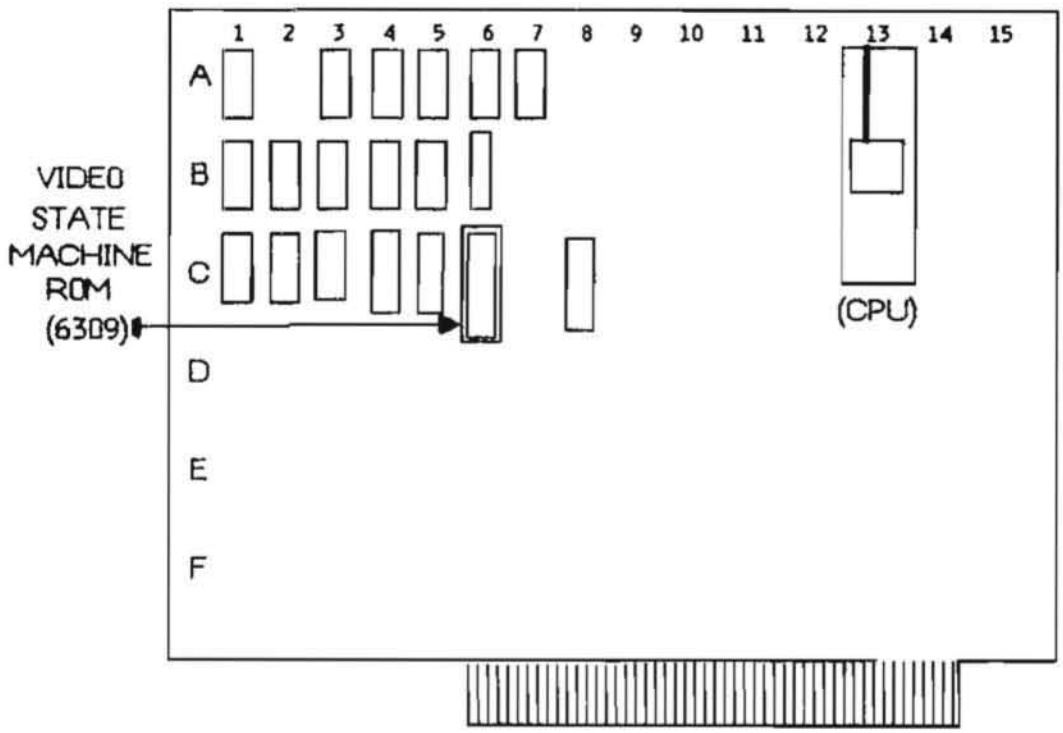

apple computer

LISA PACKING INSTRUCTIONS

There are only two, but they are important.

1. Use the box it came in.
2. **THE CRT MUST FACE DOWN!!**

apple computer

Lisa Technical Procedures

Section 2

Set-up

Contents:

Introduction.....2.3
Material Requirements.....2.3
A. Unboxing the Lisa.....2.5
B. Installing the Pull-out Reference Cards.....2.5
C. Checking the Battery Switch.....2.6
D. Installing the Lisa Accessories.....2.7
E. Installing the ProFile.....2.8
F. Installing the Office System Software.....2.9
G. Putting the Icons in Order.....2.13
H. Installing an Apple Daisy Wheel Printer.....2.17
I. Installing an Apple Dot Matrix Printer.....2.18
J. Setting Preferences.....2.19
K. Setting the Clock.....2.20
L. Testing the System: Printing a Document.....2.20
M. Before You Leave: Getting the User Started.....2.21

Appendix 1: Replacing a Single Tool on the ProFile.....2.22
Appendix 2: Set-up Checklist.....2.23

INTRODUCTION

This job aid includes all the steps in a Lisa installation. Appendix 2, a checklist, is a summary of the procedure.

If you have had Lisa Level 1 training, you will have all the background you need for these procedures. If you have not had that course, be sure to go through LisaGuide and the Service section of the Lisa Owner's Guide before you attempt these procedures.

Before you leave the users' site, be sure to give them the Lisa Customer Orientation card and get them started on the Lisa.

MATERIAL REQUIREMENTS:

Item	Part Number
Lisa, with Lisa Accessories Kit	A6P0001 (A6M0101)
ProFile, with Lisa ProFile Accessories Kit	(A9M0005) (A6C0005)
Apple Dot Matrix Printer with Lisa DMP Accessories Kit	A2M0058 (A6C0350)
or	
Apple Daisy Wheel Printer with Lisa DWP Accessories Kit	A3M0025 (A6C0351)

IMPORTANT: The Lisa accessories kit that comes with each peripheral contains the cables necessary to connect the peripheral to a Lisa. In most cases, the peripherals will not work correctly if you try to use cables meant for an Apple II or other computer. If you don't have the proper Lisa accessories kits, get them!

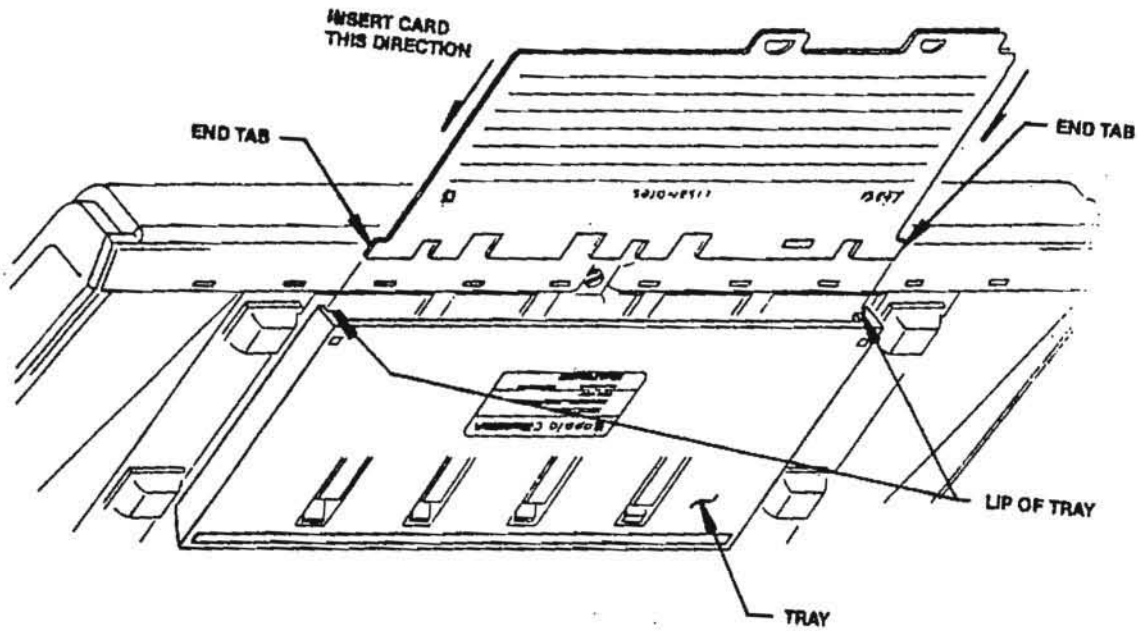

FIGURE 1

INSTALLING PULL-OUT REFERENCE CARDS

A. UNBOXING THE LISA

The Lisa comes in two boxes. One holds the Lisa itself; the other holds the accessories kit, including the keyboard, the mouse and the power cord.

1. Slide the Lisa out of its carton. Remove the foam padding.

2. Set the cabinet on a hard, flat surface. (Watch your back - it's heavy.) Leave at least 2 inches of clearance on each side, to allow for proper ventilation.

3. Unbox the keyboard, the mouse and the power cord.

B. INSTALLING THE PULL-OUT REFERENCE CARDS

A set of pull-out reference cards is packed in the accessories box of every new Lisa. These cards fit into the tray under the Lisa keyboard.

IMPORTANT: BEFORE INSTALLING THE CARDS, FILL OUT THE "SUPPORT INFORMATION" SECTION OF CARD 4, "CONFIGURATION/ SUPPORT". CUSTOMERS NEED THIS INFORMATION FOR ANY WARRANTY REPAIRS AND PHONE SUPPORT THEY MAY REQUEST.

1. Prop up the keyboard so that the bottom is facing you.

2. Start with the Configuration/Support card, labelled 4 on the front and 1 on the back.

   a) Hold the card upside down as shown in Figure 1, with the blank side facing you and the end tabs next to the keyboard.

   b) Align the two end tabs with the lips at the ends of the tray.

   c) Using both hands, simultaneously push both end tabs behind the lips of the tray so that the card slides into the tray.

3. Repeat with the Windows/Text card (labelled 3 on the front and 2 on the back), installing it behind the Configuration/Support card.

4. Repeat with the Icons card (labelled 2 on the front and 3 on the back), and then with the Keyboard card (labelled 1 on the front and 4 on the back).

To remove the pull-out reference cards (in case of error):

a) Prop up the keyboard so that the bottom is facing you (see Figure 1).

b) Starting with the card closest to the keyboard, pull the card out as far as it will go.

c) Hold the card firmly on either the right or left side, as close to the keyboard as possible.

d) Insert a straightened paper clip (or any other pointed tool) into the square hole in the tray at whichever side you are holding.

e) Push in the paper clip while pulling the card out of the tray. When the end tab of the card clears the lip of the tray, the card can be removed from the tray.

f) Repeat steps b through e for each card, always removing the card closest to the keyboard.

C. CHECKING THE BATTERY SWITCH

1. Remove the back panel and find the set of four batteries on the lower right side of the I/O board.

2. Find the switch next to the batteries, and make sure the switch is set to ON (toward the left).

If you are installing a Dot Matrix Printer, leave the back cover off until you have installed the Parallel Interface Card (see next page).

D. INSTALLING LISA ACCESSORIES

1. If you have a Dot Matrix Printer to install, you must first install a Parallel Interface Card (PIC) in a Lisa expansion slot, following the steps below.

   a) Install the PIC in expansion slot 2 at the right rear of the Lisa. Be sure to remove the slot cover and store it on the back panel.

   b) Replace the back panel.

2. Attach the mouse cord to the mouse socket on the back panel of the Lisa.

3. Attach the keyboard cord to the front panel of the Lisa, under the square white Soft Switch (below the disk drives).

4. With the back panel replaced, connect the power cord to the Lisa; then plug it into the wall.

E. INSTALLING THE PROFILE

1. Unbox the ProFile and its cables. (The power cord and interface cable are in a small box within the main ProFile box.)

2. Connect the ribbon cable to the ProFile and to the built-in parallel port at the back of the Lisa.

3. With the ProFile power switch OFF, connect the power cord to ProFile and to wall current.

4. Turn on the ProFile and wait for the red ready light to become steady (about a minute).

F. INSTALLING THE OFFICE SYSTEM SOFTWARE

The Lisa Office System can be loaded on to the ProFile from two diskettes, called Office System 1 and 2, which are packaged with the Lisa Owner's Guide. Once the Office System is on the ProFile, you can copy the six basic Lisa tools (LisaDraw, LisaCalc, etc.) onto the ProFile from tool master diskettes. (The tool master diskettes are packaged with the tool manuals.) Thereafter, the tool master diskettes are only needed as a backup to the ProFile, in case the software needs to be reinstalled after a system crash.

Follow these procedures ONLY if your ProFile is blank or if you want to replace or reinstall all the software. (If you are replacing only one or two tools, use the method given in Appendix 1.)

NOTES:

a. If you are installing a new Lisa system, make sure that you are using new (i.e. never before copied) **tool master diskettes**, and that the diskettes you are copying are meant to be used on this particular Lisa. Tool master diskettes that have been copied by one Lisa can never thereafter be copied onto another Lisa, and copies made from them (whether on ProFile or on diskette) can never be used on another Lisa.

If you have more than one Lisa, you need a separate set of tool master diskettes for each. (This does not apply to the Office System 1 and 2 diskettes, nor to LisaTest, Lisaguide or data diskettes.)

b. Do not attempt to install LisaTest, LisaGuide or data diskettes onto the ProFile using this method. LisaTest and LisaGuide must be run from diskette and cannot be copied onto ProFile by this method.

c. Be careful to avoid accidentally trying to install a tool twice; attempting to do so will wipe out most of the software already installed, and you will have to repeat the entire process.

d. Start with the Lisa power off. If the Lisa is already on, turn it off by pressing the ON-OFF button.

1. Turn on the Lisa by pressing the ON-OFF button once. After a few seconds, you should hear a click, as the Lisa begins its self-test sequence. When you hear the click (or after about 15 seconds), hit any key (except CAPS LOCK).

   After a few moments, the screen will prompt you to specify the startup device. (If you do not hit a key before the Lisa double-clicks, the Lisa will try to start up from the ProFile or one of the disk drives. If that happens, wait until the process is finished; then press the ON-OFF button to turn the Lisa off. Then repeat this step.)

2. Insert the diskette labelled "Office System 1" into drive 1 (the upper built-in drive). (Hold the diskette so that the cutout parts enter the drive first.)

3. Insert "Office System 2" into drive 2 (the lower built-in drive).

4. Use the mouse to select the icon of drive 1.

5. A screen like Figure 2 will appear (but with only three options). Roll the mouse on your desk until the pointer is over the box that says "Install".

6. Click the mouse button once. Now the Lisa will install the system software on the ProFile. (This will take several minutes.)

7. When the installation is finished, the lower disk drive will eject its diskette and the screen will say "The startup software has been installed." Take out the ejected diskette, put it in its envelope, and click "OK".

8. The next screen will ask if you have another diskette to add to the ProFile. Insert a new (i.e., never before copied or installed) tool master diskette into drive 2 (see NOTES at top of this section). When you insert a new diskette you will see this message:

> The Lisa is about to make the first copy of the [tool name]. This copy and all future copies can be run only on this Lisa. Is that what you want?

If you want to proceed, click "Copy". (If not, click "Cancel".)

Lisa will automatically install the contents of the diskette on the ProFile, eject the diskette, and ask if you have another. Continue until all tool master diskettes have been installed. Then click "Done".

9. Now the Lisa will display the screen shown in Figure 2. This time, click "Finished".

10. Next the Lisa will ask if you want it to turn off or to start up from the ProFile. Select "Start up".

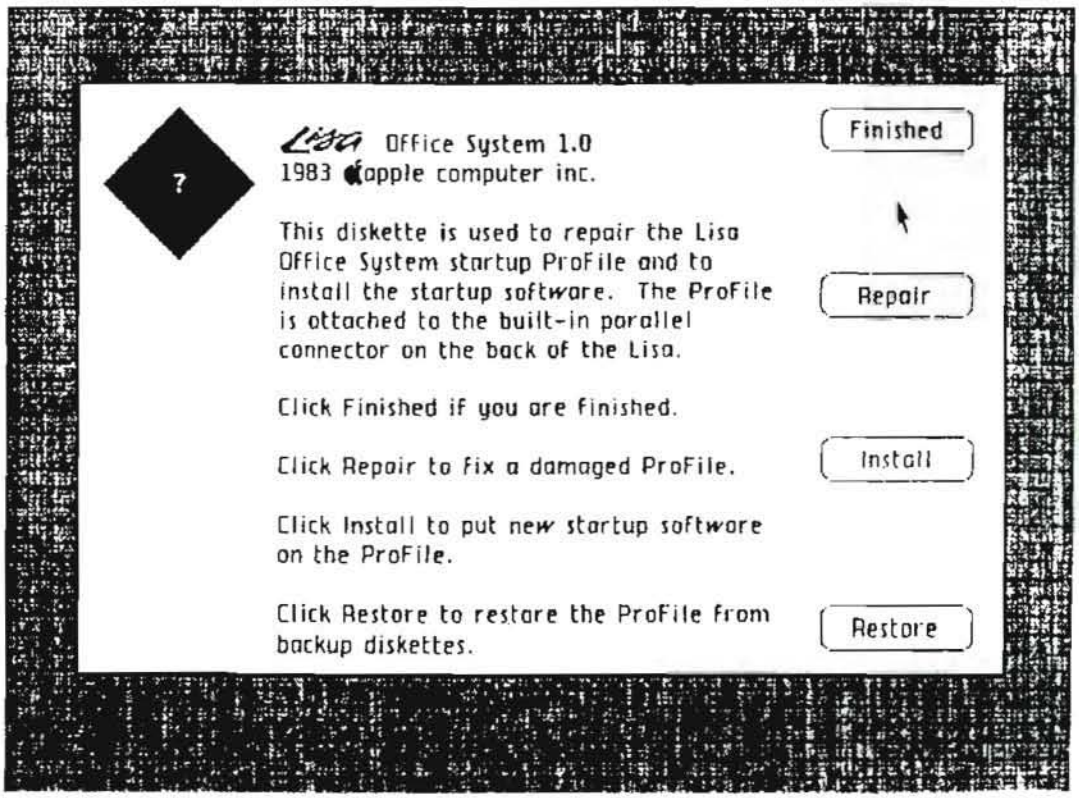

FIGURE 2

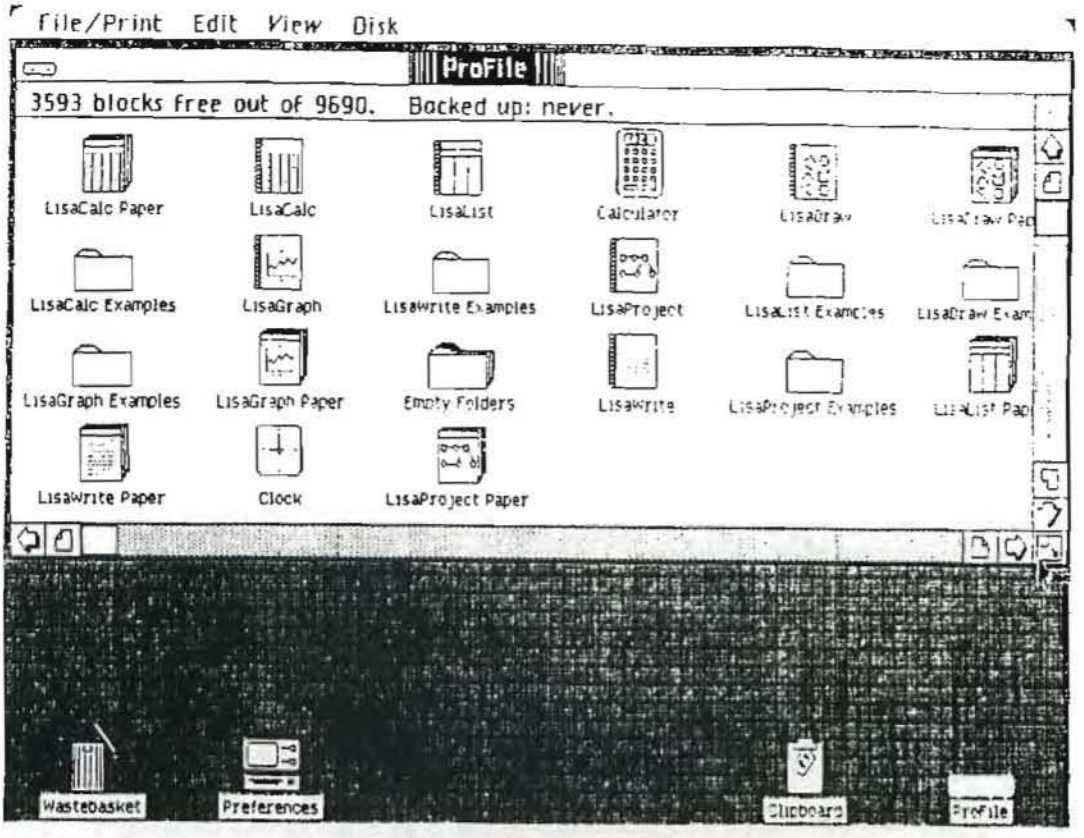

FIGURE 3

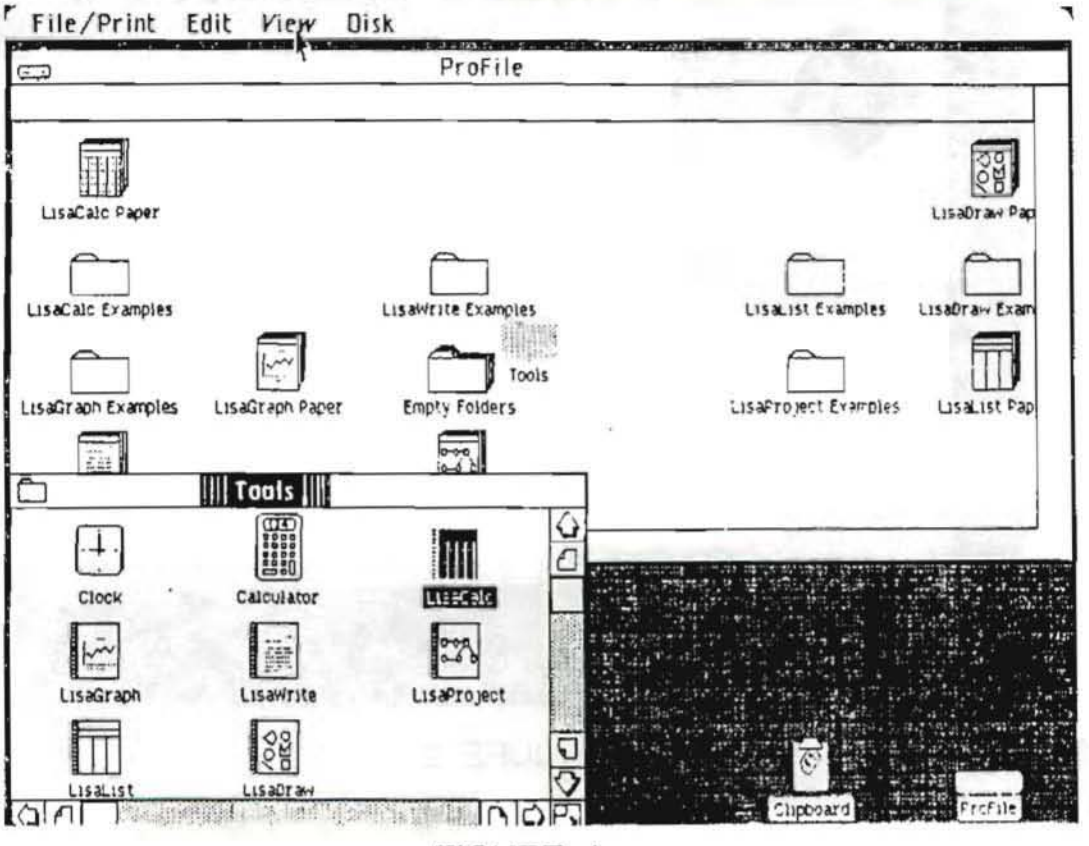

FIGURE 4

G. PUTTING THE ICONS IN ORDER

Each tool diskette puts three icons onto the ProFile: a **pad of paper** (e.g. "LisaCalc Paper"), a **file folder** of examples (e.g. "LisaCalc Examples"), and a **spiral notebook** (e.g. "LisaCalc"). (Find these items in Figure 4 to see what the different icons look like.) When you first open the ProFile window after installing the software, these icons will be stacked one on top of another, so that many will not be visible. They need to be unstacked and repositioned to match the diagrams in the user training materials. To do that, follow the steps below.

1. Open the ProFile icon (double-click). Use the mouse to enlarge the ProFile window to the approximate shape and size shown in Figure 3.

2. Pull down the View menu and select "Straighten Up Icons". (This will unstack any stacked icons and straighten the rows and columns of the display.)

3. If necessary, use the mouse to enlarge the ProFile window so that you can see all the icons (see Figure 3).

4. Find the "Empty Folders" icon and double-click on it. The Lisa will create a new folder with the label "Untitled".

5. Make sure that "Untitled" is selected (black); if not, click once on the icon. Then type Tools, and that word will replace "Untitled" on the title line.

6. Open the new Tools folder (double-click), and use the mouse to give the Tool and ProFile windows the size and shape shown in Figure 4. Position them so that they overlap as little as possible.

7. The **tool icons** are the spiral pads labelled "LisaWrite," "LisaDraw," etc. You can identify them by the spiral along the left side of the icon. Use the mouse to move the tool icons, and the Clock and Calculator, from the ProFile window onto the Tool window, in the positions shown in Figure 4.

8. Make sure the Tools window is active (title should be white-on-black as in Figure 4; if not, click once anywhere on Tools window). Pull down the View menu and select "Straighten Up Icons". (If the icons rearrange themselves into more or fewer columns than you had planned, the window is too wide or too narrow: use the mouse to change its size. Then repeat steps 7 and 8.)

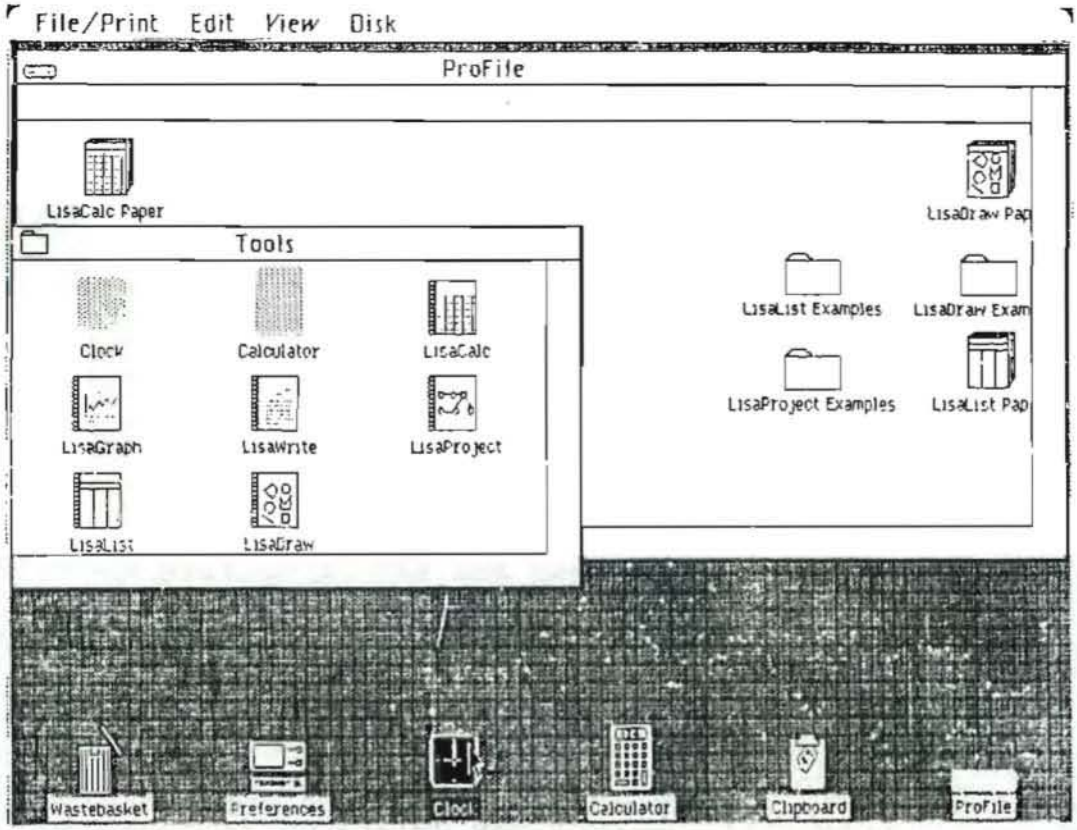

FIGURE 5

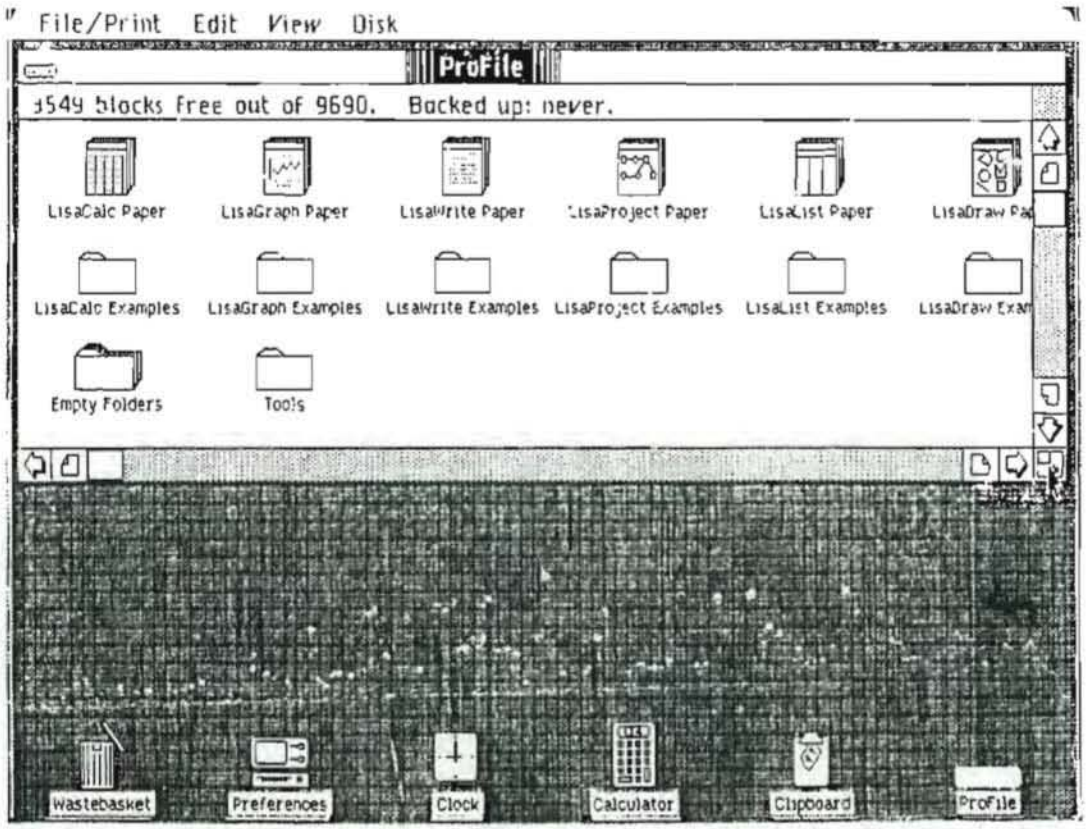

FIGURE 6

9. Move the Tools window into the position shown in Figure 5.

10. Use the mouse to move the Clock and Calculator from the Tools window onto the desktop. Position them as in Figure 5.

11. Put away "Tools" on ProFile (double-click on small icon at upper left corner of Tools window).

12. Move the remaining icons into the positions shown in Figure 6.

13. Make the ProFile window the size and shape shown in Figure 6.

14. Make sure the ProFile window is active (title should be white-on-black; if not, click once anywhere on the window.) Then open the View menu and select "Straighten up Icons". Now the Lisa will straighten up the icons in the ProFile window.

15. Set aside ProFile (double-click on small icon at upper left corner of ProFile window).

16. Make sure the icons on the desktop are in the order shown in Figure 6. Open the View menu and select "Straighten up Icons".

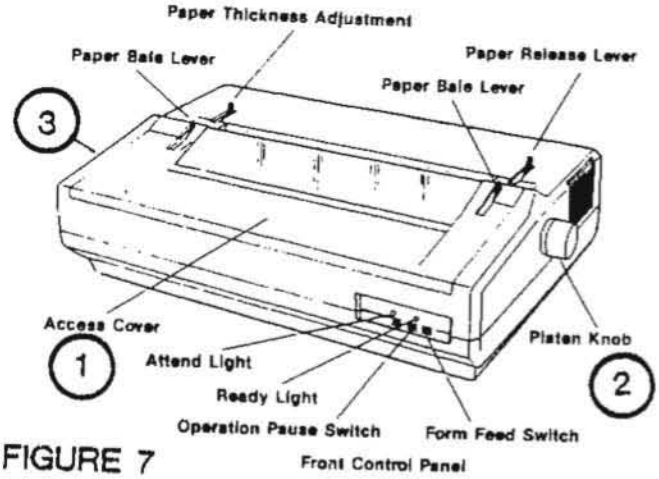

FIGURE 7

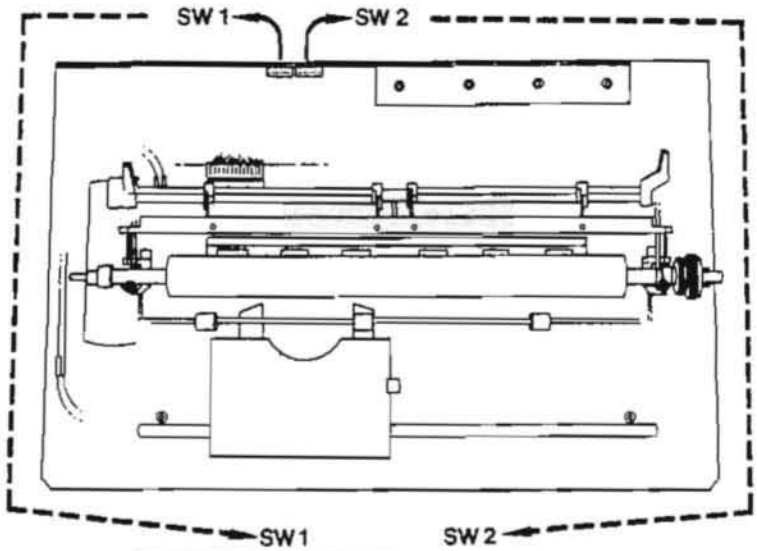

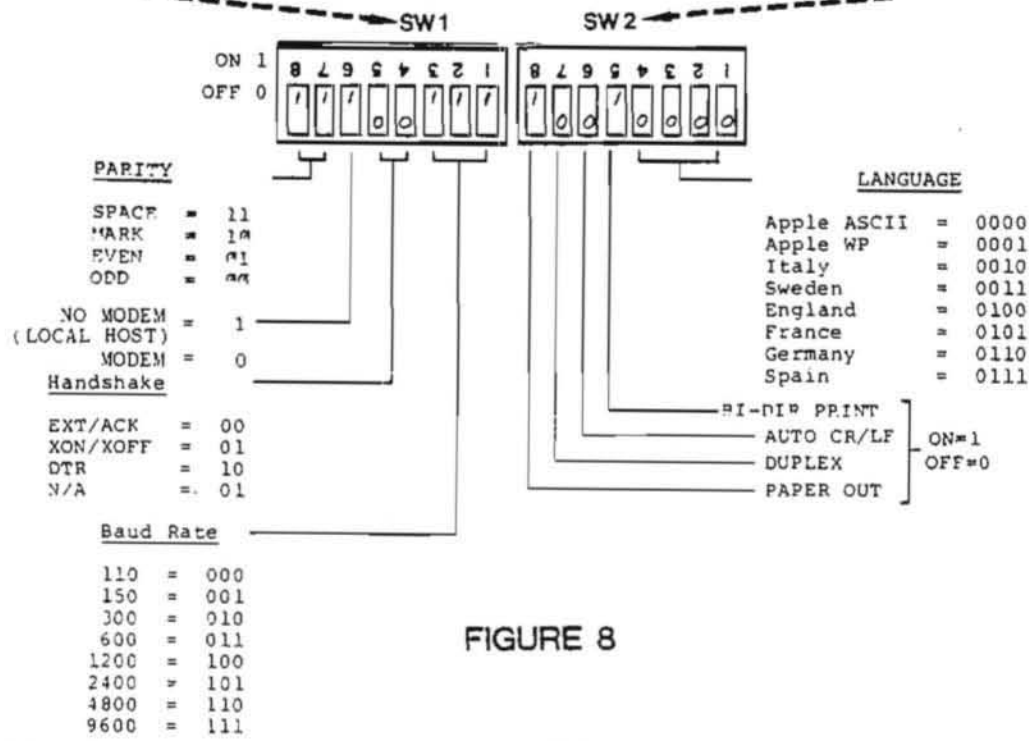

FIGURE 8

H. CONFIGURING AND INSTALLING AN APPLE DAISY WHEEL PRINTER

Before you attach a DWP to a Lisa, you must set the configuration switches inside the DWP to be compatible with the Lisa. If you are not installing a DWP, skip this section.

1. Open the printer as follows:

   a) With power off, remove the access panel (Figure 7, #1) by pulling it forward.

   b Remove the two screws inside the front panel of the printer (one on each side).

   c Remove the two screws at the rear of the printer.

   d) Pull off the platen knob (Figure 7, #2).

   e) Lift off the cover (Figure 7, #3).

2. Locate the two sets of configuration switches at the back of the DWP (see Figure 8). Set them as pictured in Figure 8.

3. Locate the user-accessible DIP switch just inside the front of the printer. Make sure it is set as follows.

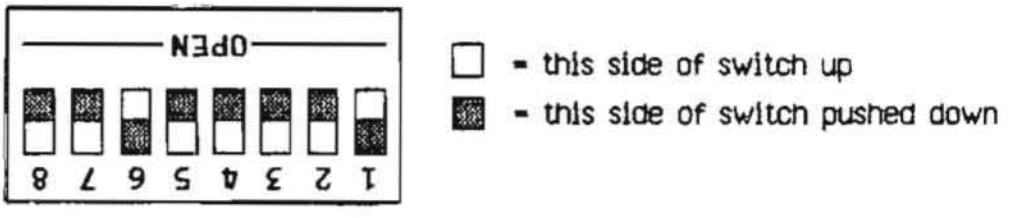

4. Return cover, screws, platen knob and access cover. Insert paper.

5. Connect the DWP to either serial port at the back of the Lisa, using an RS 232 cable and a modem eliminator cable.

6. Make sure DWP power switch is set to OFF. Then connect power cord to DWP and to wall current.

7. Install paper. **IMPORTANT:** Do not turn on the DWP yet. When you turn the Lisa on, its internal I/O test sends signals to the serial ports. If the printer is on at that time, it will print garbage and seem to have gone crazy. This does not indicate a printer problem.

I. INSTALLING AN APPLE DOT MATRIX PRINTER

If you are not installing a DMP, skip this section.

1. With power OFF, remove the front access panel from the DMP by lifting up on the front edge.

2. Inside the printer, under a plastic strip at the right, are two green DIP switches. On each switch, switch #7 should be closed and all the rest open. The switches should look like this:

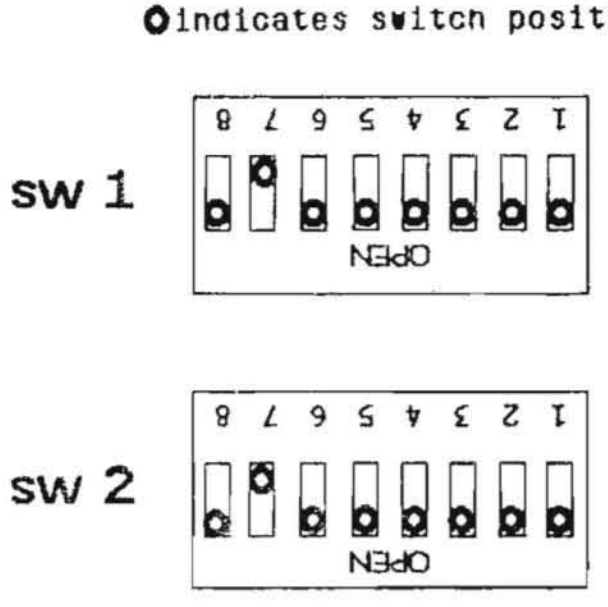

3. Connect DMP cable connector to back of DMP and to upper connector of Parallel Interface Card in Lisa.

4. Make sure DMP power switch is set to OFF. Then connect power cord to DMP and wall current.

5. Install paper and turn printer on.

J. SETTING PREFERENCES

"Preferences" gives you control over Lisa's input-output devices. Whenever you connect or disconnect a device from the Lisa, you must inform the Lisa of that fact by means of the "Device Connections" menu in Preferences.

1. Open Preferences icon (by double-clicking with the mouse). Note the three choices at the top of the Preferences window: "Convenience Settings," "Startup," and "Device Connections".

2. Move pointer to "Device Connections". When the pointer becomes a check mark, click once on the mouse button.

3. On the next screen, choose "Parallel" (click once).

4. When asked what device you intend to connect, click on "ProFile".

5. When Note screen appears, click "OK".

6. If you have installed a Dot Matrix Printer, choose "Expansion 2 upper" (click once).

7. When asked what device you intend to connect, click on "Dot Matrix Printer".

8. When Note screen appears, click "OK".

9. When "Setup of Apple Dot Matrix Printer" appears, select appropriate settings.

10. If you have installed a Daisy Wheel Printer, choose the box for the Serial Port (A or B) to which you connected it. When asked what device you intend to connect, check "Apple Daisy Wheel Printer".

11. When Note screen appears, click "OK".

12. When "Setup of Apple Daisy Wheel Printer" appears, select appropriate settings.

13. Choose "Startup" from top of Preferences window.

14. On the Startup screen, choose "Start Up From Disk Attached to Parallel Connector" (i.e., the ProFile). Then choose "Brief Memory Test".

15. Set aside Preferences by double-clicking at the upper left-hand corner of the window.

CONTINUED ON NEXT PAGE

16. To cause the Lisa to use the Preferences you have just selected, use the following procedure:

    a) Press the ON-OFF button. Wait for the light in the ON-OFF button to go out.

    b) Press the ON-OFF button again. Now Lisa will come on again, with your Preferences operating.

K. SETTING THE CLOCK

1. Open the clock icon (select with mouse and double-click).

2. Move the mouse over desired time or date item and click once. When item is highlighted, type correct value. Continue until all items on clock are up to date.

3. Set aside the clock (double-click in upper left corner).

L. TESTING THE SYSTEM: PRINTING A DOCUMENT

1. Make sure printer(s) are on.

2. Open ProFile icon with mouse (double-click).

3. Open examples folder for any application (LisaDraw is good for graphics demonstration).

4. Double-click on one of the examples, to create a new document ("Untitled"). Then double-click on "Untitled," to open it.

5. Pull down the File/Print menu and select "Format for Printer". Make the appropriate settings for the system at hand. Then click in the "OK" box.

6. Pull down the File/Print menu and select "Print". Make the appropriate settings. Then click in the "OK" box.

If the document prints, the Lisa is functional. If not, check the printer cables. If they are properly seated and the document still will not print, check the Troubleshooting section of Lisa Owner's Guide or Level 1 Technical Procedures.

M. GETTING THE USER STARTED

After setting a system up for a customer, give the new owners the Lisa Customer Orientation Card (see illustration below) and go over it with them, to help them get started with their Lisa. You should make sure that they can turn the system on and off properly and that they can start up LisaGuide before you leave.

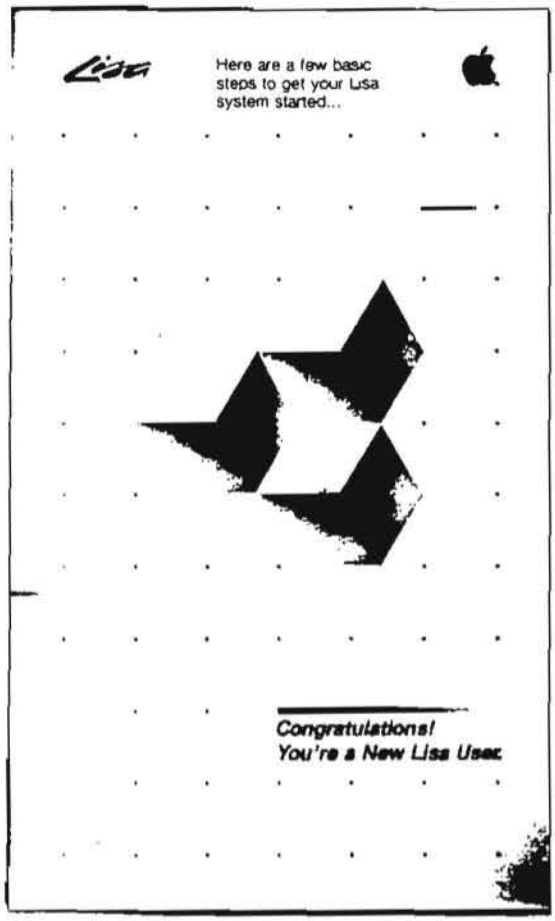

APPENDIX 1

Replacing a Single Tool on the ProFile

If you accidentally discard a tool icon or pad-of-paper icon and want to replace it, you should use the method described here rather than the method given in section D (using the Office System 1 and 2 diskettes).

1. Turn the Lisa on and start up from the ProFile.
2. Insert the tool master diskette in either drive.
3. When the diskette icon appears on the screen, open it (double-click with mouse). Select and **duplicate** the desired icon (use the File/Print menu).
4. Move the highlighted duplicate icon into the ProFile. (If it is a tool icon (spiral notebook), open the ProFile icon and the Tools folder, and move the tool icon into the Tools folder.)

apple computer

APPENDIX 2

Set-up Checklist

1- Serial number and support information written on pull-out cards?

2- Pull-out cards installed?

3- I/O board batteries on?

4- Parallel Interface Card installed in expansion slot 2 (for DMP)?

5- Software loaded onto ProFile from **this Lisa's tool master diskettes**?

6- Icons put in correct order?

7- Daisy Wheel Printer:

   a) All three internal switches set correctly?

   b) Correct cable and modem eliminator cable?

8- Dot Matrix Printer

   a) Both internal switches set correctly?

   b) Correct cable?

   c) Connected to upper connector of Parallel Interface Card?

9- Preferences set correctly?

10- Clock set?

11- Document prints properly?

12- Customer knows how to begin working with Lisa?

Lisa Technical Procedures

Section 3

Video Take-apart

Contents

Safety Precautions.....3.2
Discharging the CRT.....3.5
Removing the CRT.....3.9
Installing the CRT.....3.10
Removing the Video Board 3.11
Replacing the Video Board.....3.11
Removing the Flyback Transformer.....3.13
Replacing the Flyback Transformer.....3.13
Removing the Disk Drive Cable Assembly.....3.14
Replacing the Disk Drive Cable Assembly.....3.14
Locating the Power-Supply-to-Card-Cage Assembly.....3.15
Disposing of the Cathode-Ray Tube (CRT).....3.16

SAFETY PRECAUTIONS

The Lisa, with its built-in video monitor, is harmless as long as you're just watching the display. Removing the cover, however, exposes you to the high-voltage Cathode-Ray Tube (CRT)--the picture tube. The following precautions must be taken to ensure your safety, especially when you are making adjustments on a live monitor.

Safe Electrical Setup

1. **Be sure your outlet is correctly wired and properly grounded.**

   Polarity and ground testers are available from most electronics stores. Test all outlets in your service area before working on **any** electrical equipment. If you have any doubts about your building's wiring, consult a qualified electrician.

2. **Never use an adaptor plug to connect a monitor's three-prong power plug to a two-prong wall outlet.**

   Adaptors defeat the ground pin, which is a safety feature.

3. **Use an isolation transformer between the monitor and the outlet when performing live adjustments.**

   Order an isolation transformer from your electronics distributor, and make it a practice to use it whenever you are working with **any** monitor or other powered system under test. An isolation transformer isolates the circuitry of the system under test from the power company's circuitry, reducing the likelihood of a fatal shock should you simultaneously contact high voltage and anything else that is earth-grounded.

   Do not connect more equipment to the transformer than the wattage capacity of the transformer will bear. (It is usually best to connect only one piece of equipment at a time.) We recommend an isolation transformer with a minimum wattage capacity of 500 VA, with a grounded three-prong cord and receptacle. Two such transformers, available from many electronics stores and distributors, are listed below:

   Triad N-57MG Stancor GIS 500

CRT Safety Rules

1. **Do not work on a monitor alone.**

   In case of accident, it could save your life to have someone else nearby. Apple recommends that your staff be trained in Cardio-Pulmonary Resuscitation (CPR).

2. **Remove rings, watches, bracelets, hanging necklaces, and other jewelry before performing repairs on a monitor.**

   Metal jewelry is an excellent conductor of electricity. Removing jewelry will reduce the possibility of electric shock.

3. **Never use a grounding wriststrap or heelstrap or work on a grounded workbench mat when discharging a monitor or when performing live adjustments.**

   Grounding wriststraps, heelstraps, and mats are used to protect sensitive components from the damaging effects of electrostatic discharge from your own body or clothing. Even though they contain a one-megohm resistor and are designed to conduct only small electrical charges, we recommend that they be used **only** when working on "dead" (uncharged) equipment.

4. **Wear safety goggles when working with a CRT.**

   The CRT contains a high vacuum. If cracked or broken, it can implode (collapse into itself, then explode). To protect your eyes from serious injury, always wear safety goggles when working on or near a CRT, and be careful of other people in the area.

5. **Before working inside a monitor, turn off the power and disconnect the AC power cord.**

   Certain parts of a monitor chassis are hot (electrified) when the monitor is under power. Except when you must have the power on (for example, when making live adjustments), never work on a plugged-in monitor--even if you have the power turned off.

6. **Keep one hand in your pocket or behind your back when working on a live monitor.**

   This practice reduces the risk of current passing through your heart, should you accidentally contact high voltage.

7. **Always discharge the anode before touching anything inside the monitor.**

   The anode of the CRT maintains a charge of about 15,000 volts DC (even when the power is off). Before touching any internal components you must discharge this voltage. The anode can regain some charge, even after it has been discharged. If the service procedure takes more than 30 minutes, the anode should be discharged again.

8. **Never touch the anode connector or the anode aperture.**

   Normally the anode aperture has a connector plugged into it (Figure 1, #2). When a CRT is replaced, the anode connector is removed, exposing the anode. The anode can maintain a charge of several thousand volts (even after the power is off).

9. **Do not pick up or handle a CRT by its neck.**

   To prevent an implosion, take every precaution against breaking the tube. Be especially careful with the neck, the area where the tube is the thinnest.

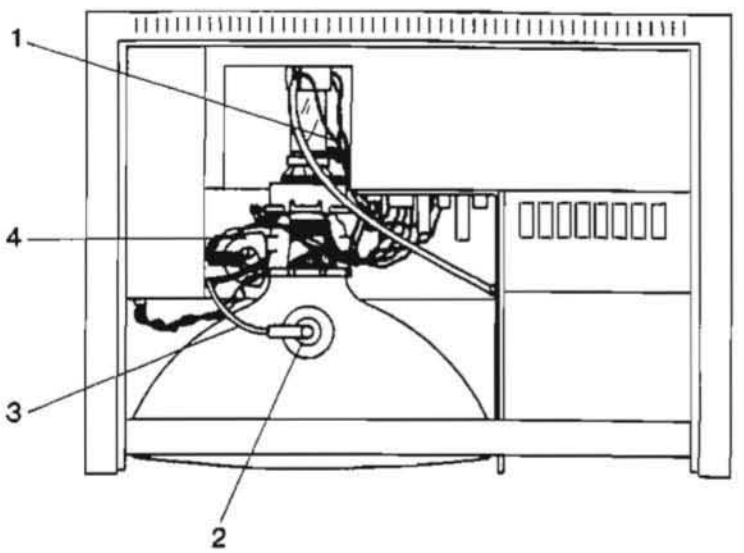

FIGURE 1

Live Adjustment Rules

In addition to the precautions listed on the previous pages, never touch the following components when adjusting a live CRT:

1. The yoke wires (Figure 1, #1)
2. The anode connector (Figure 1, #2)
3. The anode wire (Figure 1, #3)
4. The flyback transformer (Figure 1, #4)

DISCHARGING THE CRT

WARNING! WHEN WORKING ON A LISA THE FOLLOWING STEPS CAN BE DANGEROUS IF NOT EXECUTED PROPERLY.

1. If the Lisa is on, press the ON-OFF switch. When it is finished powering down, unplug the Lisa.

2. Remove the back panel, card cage, and front panel.

3. Remove the top of the Lisa. It is joined to the chassis by screws which are permanently attached to the chassis. These two screws are found 'hidden' on the underside of the roof of the card cage chamber toward the back of the machine. To access them you have to poke your phillips screw driver up through the round holes in the flap which is part of the roof of the card cage chamber. See Figure 2, #1.

FIGURE 2

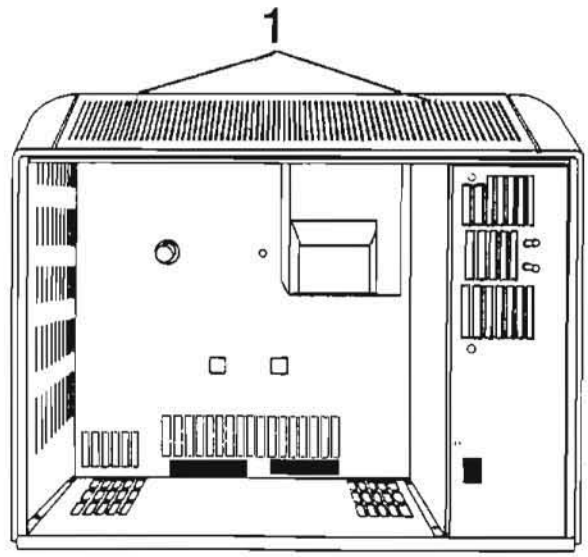

4. Lift off the top panel from the back of the Lisa.

5. **Put on the safety goggles.**

6. **Remove any rings, wristwatches, and bracelets.**

7. Attach the alligator lead to the large screw driver three inches from the handle on one end, and to the metal chassis on the other end.

FIGURE 3

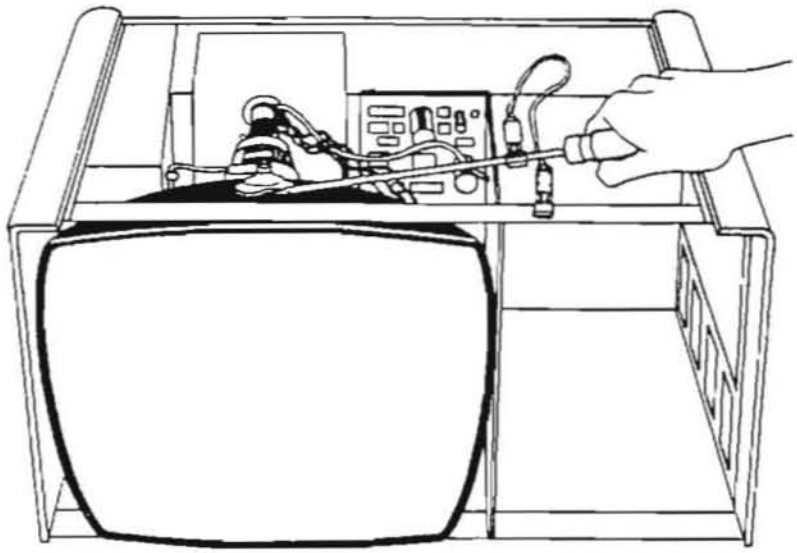

FIGURE 4

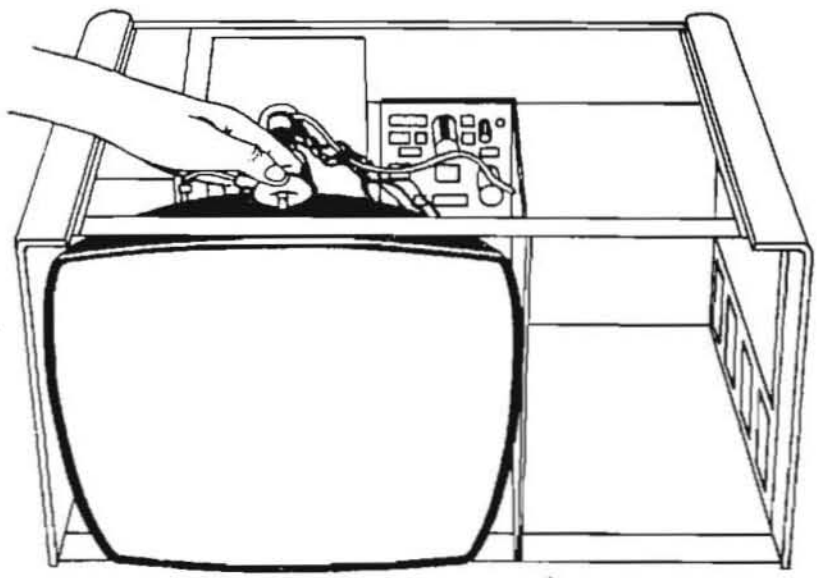

8. Put one hand in your pocket or behind your back. With your other hand grasping ONLY the insulated handle of the screwdriver, insert the screwdriver under the CRT anode cap. See Figure 3. Be sure the blade comes into contact with the anode ring.

   CAUTION: DO NOT USE FORCE. If it is difficult to get the screwdriver under the anode cap, put down the large screwdriver and use a smaller screwdriver to loosen the suction of the anode cap on the tube. Remember, keep one hand behind your back while loosening the suction. Once the suction is relieved, proceed to discharge the anode with the large screwdriver as described above.

9. Remove the screwdriver.

10. Remove the alligator clips.

11. With one hand behind your back remove the anode cap. (Pull back on the rubber of the anode cap. First push one way then the other to loosen and remove it.) See Figure 4.

FIGURE 5

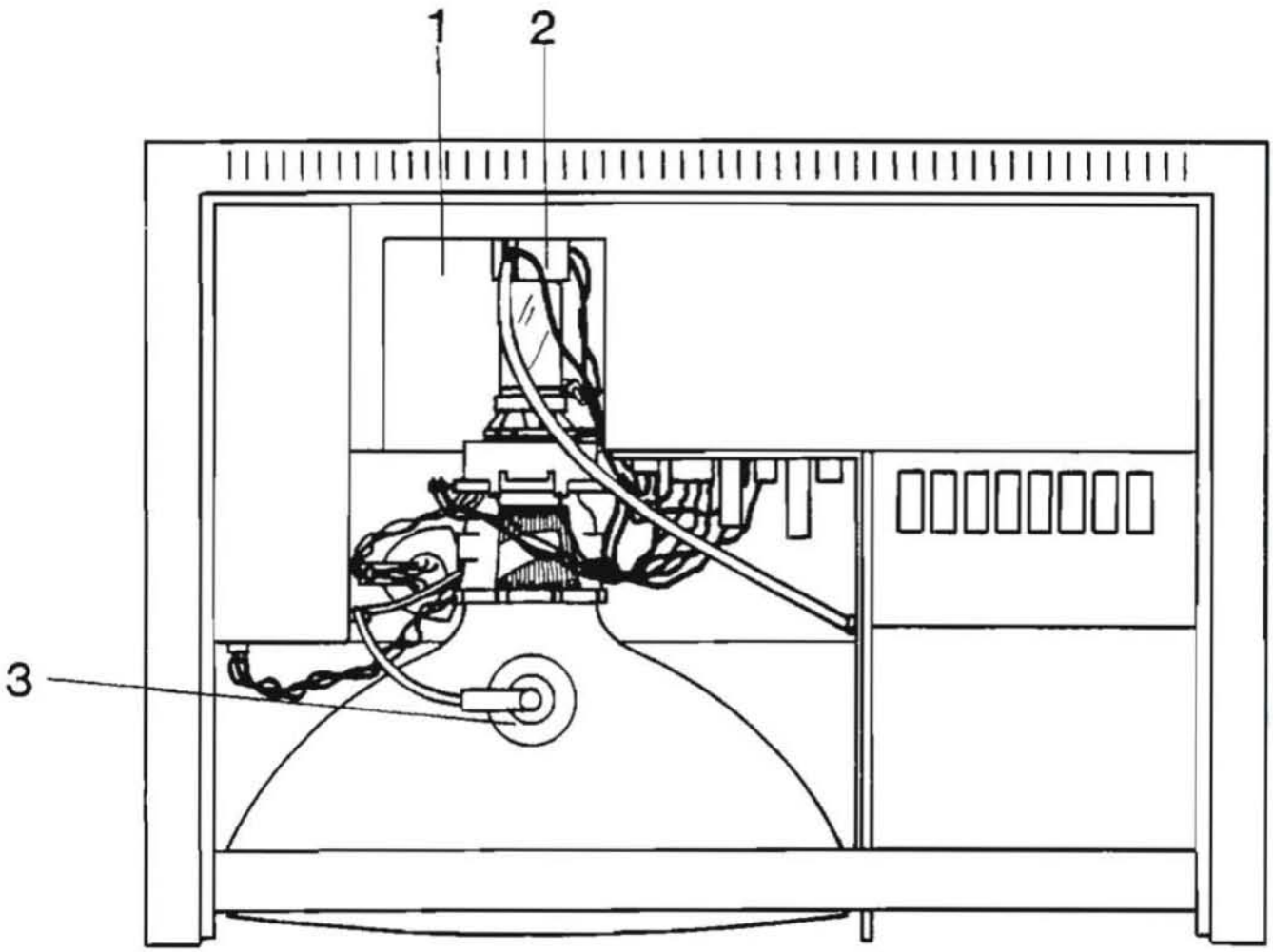

REMOVING THE CRT

1. Put on safety goggles.

2. Remove the cover.

3. **Discharge the CRT.**

   WARNING: When working in the video chamber, avoid touching the anode and the anode cap--even after the CRT has been discharged. The anode can regain some charge over time.

4. Place the Lisa on a grounded workbench mat and put on your grounding wriststrap.

The CRT cup is the part of the chassis that surrounds the CRT neck (Figure 5, # 1). In the following steps, you will remove the cables, screws, and ground wire that are attached to the CRT cup. The ground wire (the single white wire that runs from the yoke to the contact on the chassis) is difficult to remove safely. You will do that last so that you can orient the CRT cup away from the CRT neck.

5. Remove the wires from the clamps on the side of the CRT cup. Turn the computer so that the back is facing you.

6. Supporting the cup, remove the four screws that secure the cup to the chassis. Access three screws through the video chamber, the fourth through the card cage chamber.

7. Remove the round plug from the socket at the end of the CRT neck (Figure 5, #2). (If the black plastic guide comes off the tube with the plug, replace it.)

8. Move the CRT cup so you can grasp the ground terminal and remove it safely from the contact on the floor of the CRT cup.

9. Remove the two upper yoke connectors from the video board. Be careful of the 25-volt capacitor directly above the second plug.

WARNING: In the following steps, avoid touching the red-painted anode area of the CRT (Figure 5, #3).

10. Use the magnetic nutdriver to remove the screws from the four front corners of the CRT, removing the top screws last. Use one hand to steady the CRT while removing the top two screws.

11. Carefully remove the CRT by pulling it toward you.

    WARNING: Do not hit the tube against the chassis frame. Do not break the seal of the yoke to the neck.

12. Set the CRT aside on a flat, soft surface.

WARNING: If you are going to dispose of the CRT, read and follow the instructions for safe devacuuming in "Disposing of the Cathode-Ray Tube (CRT)" at the end of this section.

INSTALLING THE CRT

1. Put the flyback cable (anode wire) and ground wire through the CRT cup hole.

2. Carefully place the CRT where it is to be mounted, with the anode facing up.

3. Hold the CRT in place with one hand and install the bolts. Partially install all four bolts, then tighten all of them.

4. Attach the round socket to the end of the CRT neck. It fits only one way. Make sure the pins are aligned correctly with the connector before pushing it on.

5. Connect the yoke wires to the connectors on the video board. The yellow and green wires go on the left side of the board (as you face the screen), and the red and blue wires go on the right side of the board.

   CAUTION: The CRT may be damaged if these connections are reversed.

6. Route the anode wire through the clamps on the video chamber side of the power supply chamber.

7. Clip in the anode cap.

8. Replace the ground.

9. Replace the CRT cup.

10. Replace the top.

11. Replace the card cage.

REMOVING THE VIDEO BOARD

1. Discharge the CRT.

2. Remove the two yoke plugs (upper connectors) from the video board. Be careful not to injure the 25V capacitor directly above the second plug. These connectors can be difficult to remove.

3. Remove the flyback transformer connector from the video board. Squeeze the release catches on the top and bottom of the connector and use a rocking motion to pull the connector free.

4. Remove the two phillips head screws that attach the video board to the CRT.

   NOTE: If the screws drop and remain on the bottom, the flyback may short when the computer is turned on.

5. Pull out the video board.

REPLACING THE VIDEO BOARD

1. Slide in the video board into its connector.

2. Screw in the two screws which hold the video board in place.

3. Connect the wires from the yoke to the connectors on the video board. When facing the front of the Lisa, the yellow and green wires go on the left side of the board and the red and blue wires go on the right side of the board.

4. Attach the flyback transformer connector.

5. Replace the top.

FIGURE 6

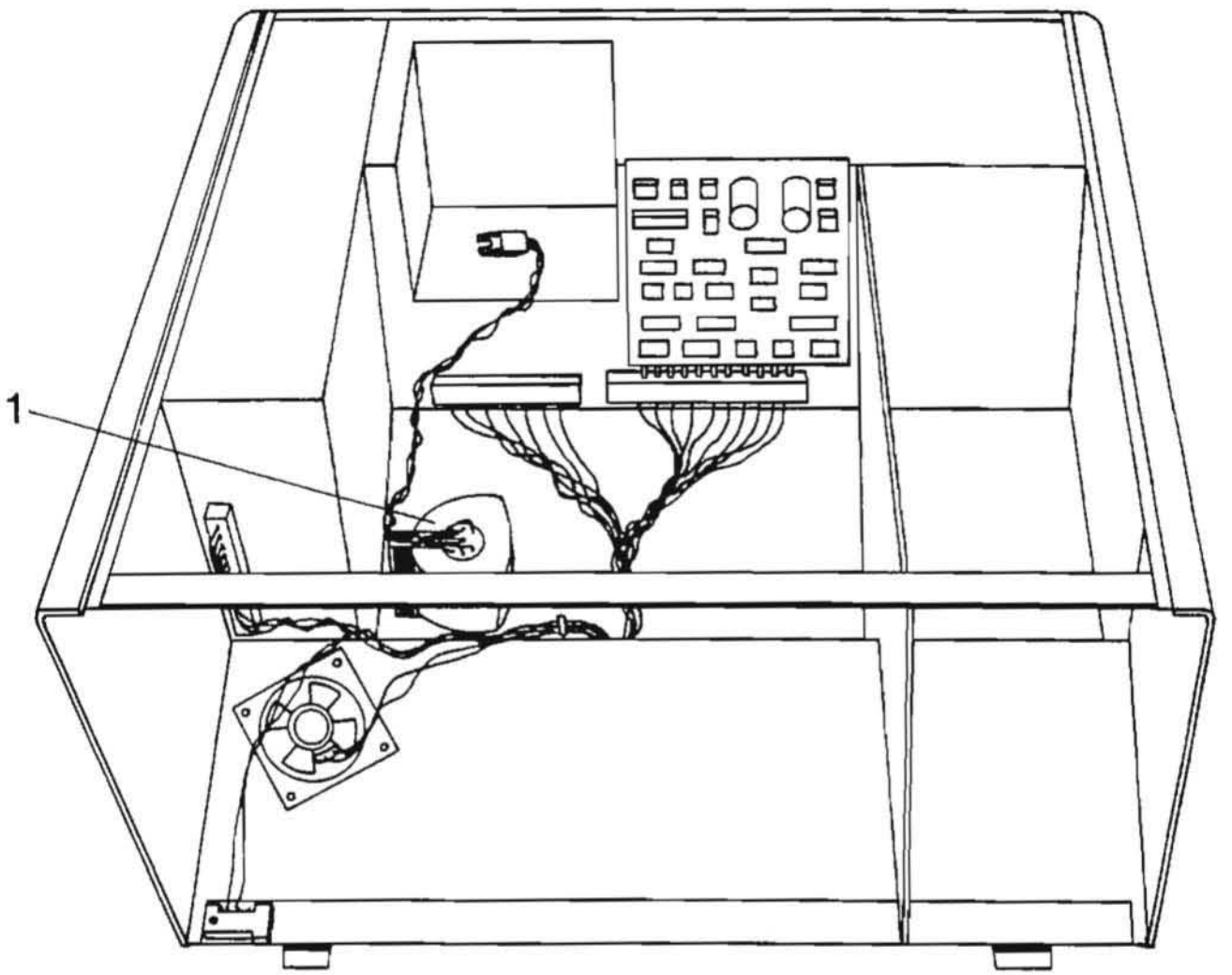

REMOVING THE FLYBACK TRANSFORMER

1. Discharge the CRT.
2. Remove the CRT.
3. Remove the power supply
4. Face the back of the Lisa. Remove bottom pan by removing 6 flathead phillips screws; four from the card cage chamber floor, and two from the power supply chamber floor.
5. Tilt the back of the Lisa forward and the bottom pan will fall free.
6. Pull the high voltage wire loose from the clamps on the side of the chassis.
7. Turn the chassis upside down.
8. Orient yourself to the front of the Lisa.
9. While holding the flyback (See Figure 6, #1) from underneath with one hand, remove the two nuts which attach the flyback to the chassis from the bottom of the machine (which is now facing up) using a number 6 nutdriver.
10. Turn the chassis right side up.

REPLACING THE FLYBACK TRANSFORMER

1. With the chassis lying on its back, orient the flyback so that the screws are sticking through the bottom of the chassis. Gently tighten down the bolts.

   Caution: These bolts are delicate. If you tighten down the nuts too much the bolts may break off.

2. Replace the bottom plate. Slide the little feet of the bottom plate up into the bottom of the chassis. Carefully set the Lisa right side up. Replace the 6 screws, starting all of them first before tightening each one down.
3. Replace CRT.

REMOVING THE DISK DRIVE CABLE ASSEMBLY

1. Remove the disk drive cables from the two clamps on the bottom of the disk drive chamber. Apply downward pressure to the tab on the right side of the clamp (perhaps with the handle of a screwdriver) and simultaneously pull up on the body of the clamp.

2. Remove the cable from the board of the ON-OFF switch. (Push the tabs apart to release the cable.)

3. Remove the disk-drive-to-card-cage connector from the bottom back panel of the disk drive chamber. It is attached with two screw/starwasher/bolt assemblies. Access the bolt on the left side of this connector through the video chamber. The screws are accessible through the card cage chamber. Hold the bolt steady with a 1/4" crescent wrench or needlenose pliers from inside the video chamber and loosen the screw from inside the card cage chamber. The bolt on the right hand side of the connector is accessible through the disk drive chamber.

REPLACING THE DISK DRIVE CABLE ASSEMBLY

1. Replace the disk-drive-to-card-cage connector. Push the screw in from the card cage side, hold the nut and starwasher in place, and tighten down the screw.

2. Plug ON-OFF switch cable into ON-OFF switch/keyboard assembly board.

3. Place the left disk drive cable on top of the right disk drive cable and insert both into the clamps on the bottom of the disk drive chamber. Lock the clamps.

LOCATING THE POWER-SUPPLY-TO-CARD-CAGE-ASSEMBLY

The power-supply-to-card-cage-assembly winds its way through the video chamber from the power supply chassis frame to where it splits and supplies power to both the card cage and the video board.

1. The safety interlock switch which is attached by one screw to the front, bottom, left of the video chamber is located at Figure 7, #1.

2. The speaker-to-assembly connector is located at Figure 7, #2.

3. The connector to the power supply chassis frame is located at Figure 7, #3. When you are replacing the connector be sure to replace the ground under the star washer when replacing the screw.

4. The video board connector is located at Figure 7, #4. When you are replacing the connector be sure to replace the ground under the star washer when replacing the screw.

5. The assembly is attached to the card cage at Figure 7, #5.

FIGURE 7

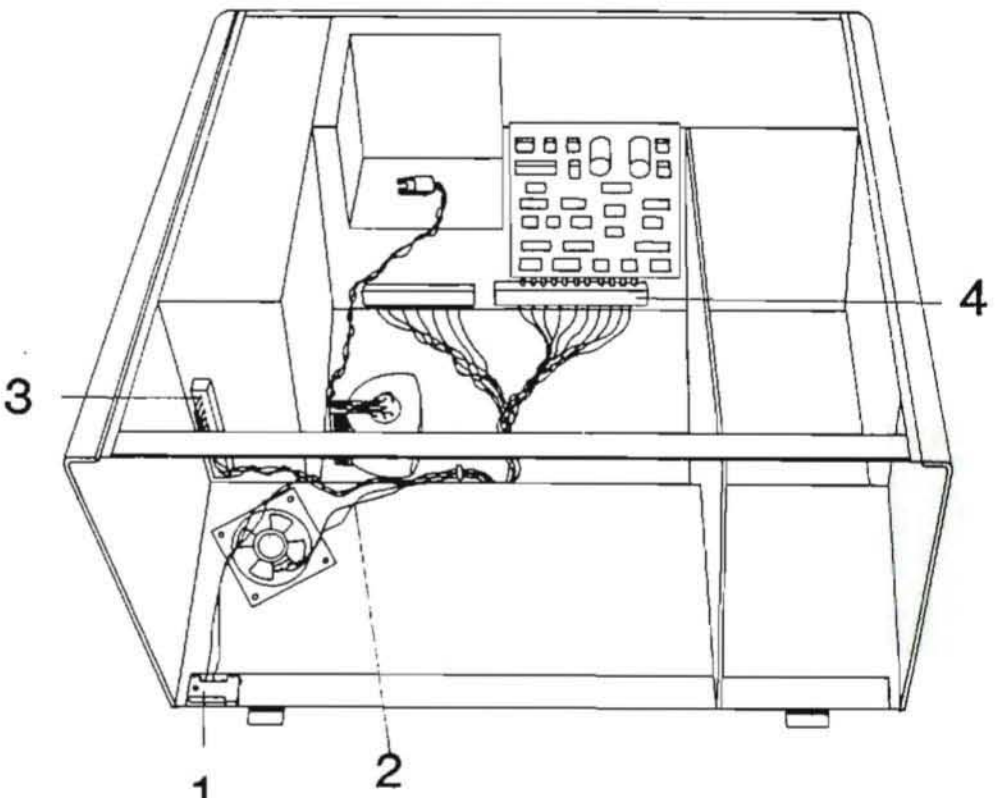

DISPOSING OF THE CATHODE-RAY TUBE (CRT)

WARNING: Remember that a CRT can implode unless it is devacuumed. Putting a defunct CRT into a trash receptacle without devacuuming it can endanger other people.

Materials Required

Thick cardboard box large enough to conceal the CRT
Large, sharp diagonal cutters
Large pliers
Duct tape
Safety goggles
Gardening gloves
12-inch square of cloth or heavy paper

Devacuuming the CRT

1. Put on the safety goggles.

2. In the side of the box about six inches from the bottom, cut or drill a hole just large enough to accommodate the very tip of the CRT.

3. Place the CRT inside the box with the tip of the neck protruding through the hole, and tape the box flaps down with duct tape (Figure 8).

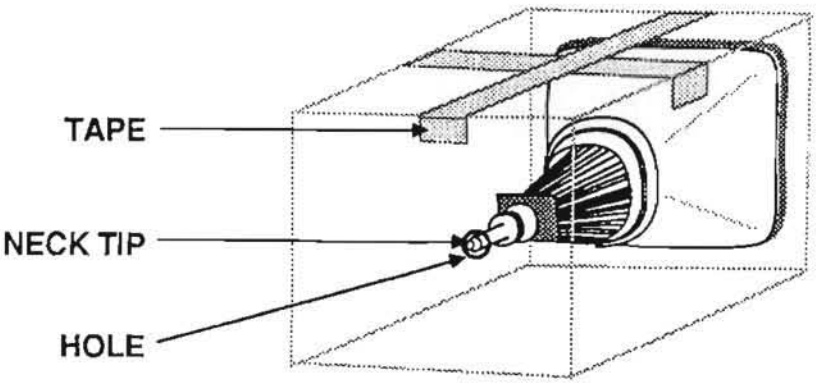

FIGURE 8

WARNING: Only the very tip of the CRT neck should be protruding through the hole in the box. The box must not have any other openings.

4. Put on the gloves.

5. If there is a plastic guide on the end of the CRT neck, pull it off. Using the diagonal cutters, carefully clip off the connector pins on the end of the CRT neck.

6. Tape the piece of cloth or paper onto the box (Figure 9, #1) so that it forms a veil over the opening (Figure 9, #2) but allows your hand access to the tip of the CRT. The veil's purpose is to catch the bits of glass that may fly during the following step.

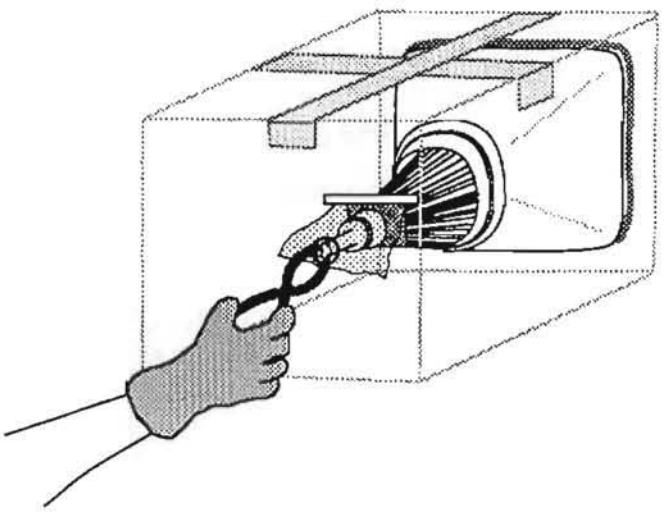

FIGURE 9

7. Make sure no one is standing nearby. Place the pliers under the veil, stand to one side, and look away while you use the pliers to snip off the exposed tip of the CRT.

   WARNING: Do not look directly at the box when cutting off the tip!

   You will probably hear a rush of air entering the CRT when the CRT vacuum breaks--but even if you don't, the procedure is complete if the inner space of the CRT is clearly visible through the opening created by the removed tip.

apple computer

Lisa Technical Procedures

Section 4

Video Adjustments

Contents:

Introduction.....4.3
Tools and Equipment Needed.....4.3
Accessing the Video Assembly and the Test Patterns.....4.4
Summary: Problems and Corrections.....4.5
Horizontal Phase Adjustment.....4.7
Brightness and Contrast Adjustments.....4.8
Calling up the Video Grid Pattern.....4.9
Yoke Adjustment.....4.10
Height, Width, Vertical Linearity Trimpots
and Centering Rings.....4.11
Magnet Adjustments.....4.12
Finishing up.....4.13

CAUTION: BEFORE PERFORMING THESE ADJUSTMENTS, REVIEW THE SAFETY PROCEDURES IN THE VIDEO TAKE-APART TECHNICAL PROCEDURE.

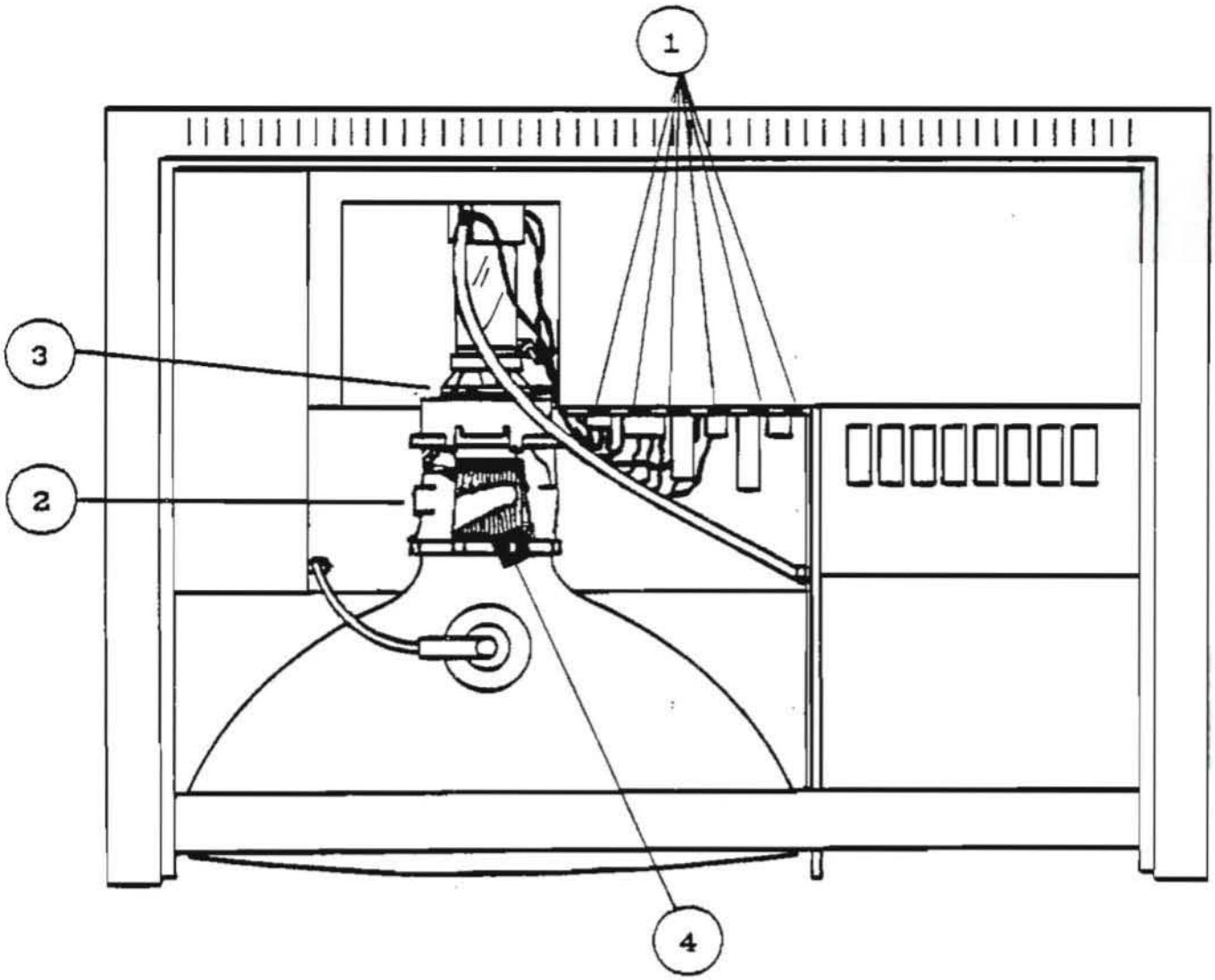

Figure 1

INTRODUCTION

Before you sell or install a Lisa, you should inspect it at your shop to make sure, first, that it works, and second, that the video functions are properly adjusted. The video adjustments can slip during shipping, and, except for brightness and focus (at the upper rear of the Lisa, above the power cord socket), and contrast (software-controlled through the Preferences window), customers have no access to the controls. The controls are inside the Lisa video assembly, near high voltage areas, where we cannot allow customers to go. So if anything goes amiss during shipping, you will have to correct it for the customer. You will also need to perform the video adjustments if you replace the CRT assembly, the flyback transformer, or the video board.

There are four major types of adjustment: the video board potentiometers (Figure 1, #1), and the CRT yoke, centering rings, and magnets (Figure 1, #2, 3, and 4). Using an alignment graticule etched with centering marks, which you can lay over the screen, you will make all four adjustments by matching a video grid pattern to the graticule.

CRT's used in the final production model will have yokes with plastic collars; these collars have spokes on which you can fit magnets. Alpha (and some Beta) Test CRT's will not have collars, and to add magnets to them you will have to use Funtak (available at Gemco, Woolworth's, etc.) or an equivalent adhesive.

TOOLS AND EQUIPMENT NEEDED

LisaTest Diskette (P/N 682-0002)
Alignment graticule (P/N 652-3520)
Diagonal cutters ("dikes")
Medium Phillips screwdriver with insulated handle and shaft
Medium or small flatblade screwdriver with insulated handle and shaft
Safety goggles with closed side panels
Long rubber gloves with fingertips cut out
Adjustment magnets (P/N 652-4520)
Glue: Torque Seal, Glyptol or equivalent

IMPORTANT: All screwdrivers used in video work should have insulated handles and shafts. If you cannot find screwdrivers with insulated shafts, you can make them by putting a double layer of shrink tubing on the shaft of a normal screwdriver with insulated handle.

ACCESSING THE VIDEO ASSEMBLY AND THE TEST PATTERNS

NOTE: In this and the following sections, we will give you directions for using mouse commands rather than keyboard commands. However, the keyboard can always be used instead of the mouse if you prefer it. To find the appropriate keyboard command, look to the right of the icon you are selecting. You will see the Apple symbol with a number or letter next to it. Press the **APPLE** key (on pre-release keyboards this was **COMMAND**) along with the number or letter shown next to the Apple symbol, and the Lisa will act as if you had selected the icon with the mouse.

IMPORTANT: Since the picture may expand and change position slightly as the Lisa warms up, you should let it warm up for 10 - 15 minutes before you adjust it.

1. Make sure power is off. Remove the front and rear panels from the Lisa.

2. Remove the card cage and unscrew and remove the top panel.

3. Replace the card cage and the front and rear panels.

4. Insert the LisaTest diskette into drive 1.

5. Turn on the Lisa by pushing the ON-OFF button, and, when you hear the first click, hit any key (except CAPS LOCK). This interrupts the automatic startup sequence and lets you specify the startup drive.

6. Use the mouse to select the icon for drive 1.

7. If the Lisa was cold, **allow it to warm up for 10-15 minutes.**

8. Examine the Lisa picture for the problems listed in the Summary of Video Adjustments (next page).

If there are no problems, do not continue with these procedures.

9. If you need to adjust the video functions, pull down the Options menu and choose "Check".

10. From the Check window, select the icon for a grey screen and click in the "OK" box. Then, when the next window appears, click in the OK box again. Now the screen will be a uniform grey.

apple computer

SUMMARY OF VIDEO ADJUSTMENTS

Problem	Correction
Screen dark.	Brightness, contrast.
Letters on screen look smudged, appear to have "shadows".	Turn down contrast trimpot.
Bent or distorted lines on crosshatch pattern or edges of picture.	Adjust magnets on yoke.
Entire picture tilted (rotated around center).	Adjust yoke.
"Shadow band" visible at left side of screen.	Horizontal Phase Adjustment.
Picture is too far to one side of the screen.	Horizontal Phase Adjustment.
Vertical distortions or distortions of scale from one part of the screen to another.	Adjust Width, Height, Vertical Linearity trimpots and centering rings.
Vertical and horizontal lines not perpendicular.	Make sure yoke is pushed fully forward on CRT neck.

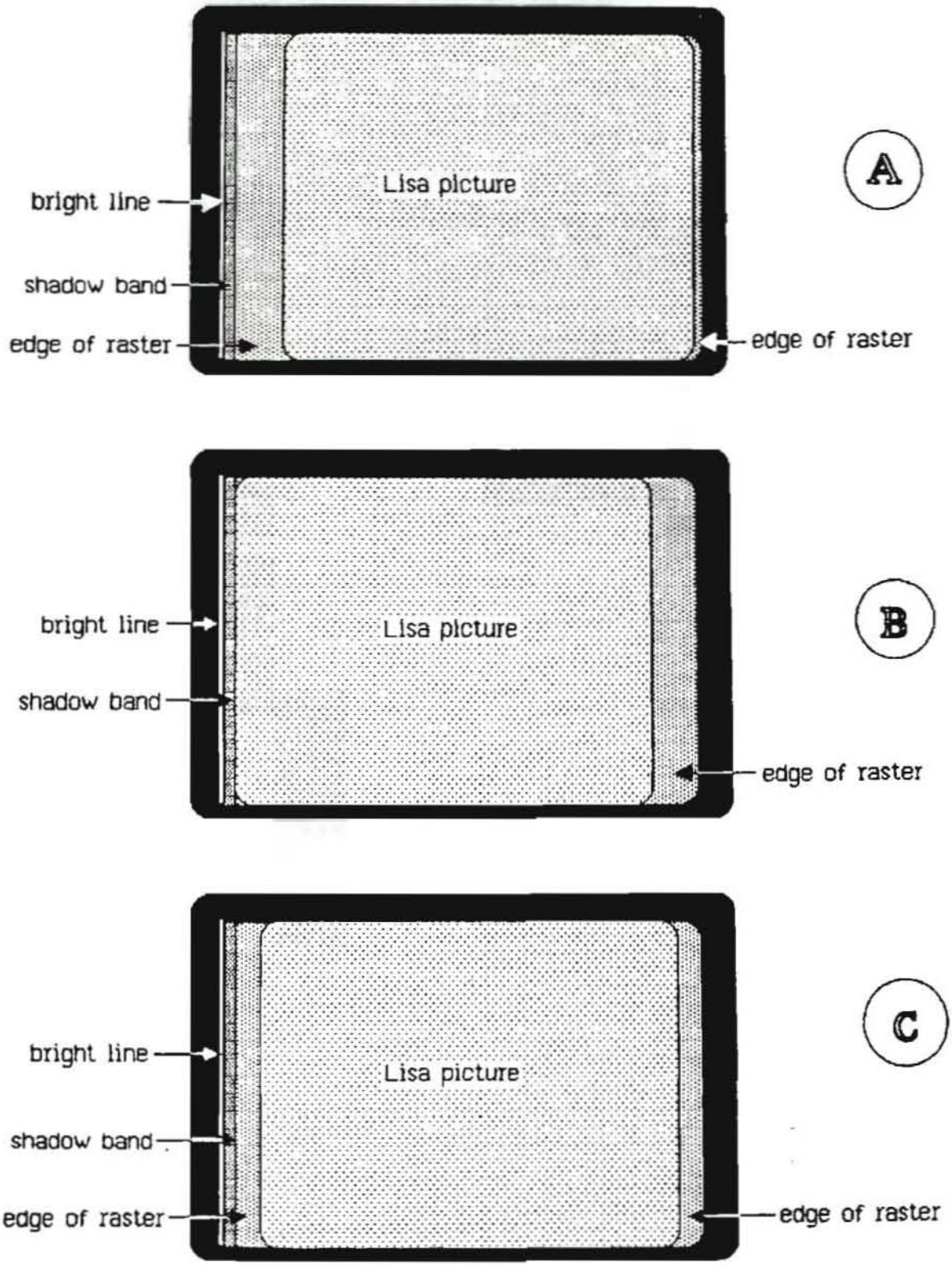
A
bright line
shadow band
edge of raster
Lisa picture
edge of raster
B
bright line
shadow band
Lisa picture
edge of raster
C
bright line
shadow band
edge of raster
Lisa picture
edge of raster

Figure 2

HORIZONTAL PHASE ADJUSTMENT

If the Lisa picture is not properly centered in the raster (illuminated field on the screen), there will be a slight distortion at the left edge of the picture, in the form of a narrow band that is slightly darker than the rest of the screen. By adjusting the Horizontal Phase trimpot, you can move the picture outside the area of distortion ("shadow band") and center it in the undistorted part of the raster.

1. Remove all metal objects from your hands and arms. Put on the safety goggles to protect your eyes. Put on the rubber gloves to protect your hands from scratches. Keep one hand in your pocket or behind your back during these adjustments.

2. Turn up the brightness control on the back of the Lisa as far as it will go. (If the picture becomes distorted, turn down the brightness until it resumes normal shape.) Note that the Lisa picture is slightly smaller than the raster (illuminated field on the screen), so that the edges of the raster can now be seen around the picture.

3. Find the Horizontal Phase trimpot on the top of the video board and use it to move the picture all the way to the right (Figure 2A).

4. At the extreme left side of the raster you will see a bright line. To the right of the bright line is a vertical band of shadow (about 1/16 inch wide) slightly darker than the rest of the raster edge. (See Figure 2A. If you cannot see the shadow band, use the Horizontal Phase trimpot to move the picture left, until it reaches the bright line. You should be able to see the shadow then.)

5. Using the trimpot, move the left edge of the picture flush with the right edge of the shadow band (see Figure 2B, #1).

6. Now observe the space between the right edge of the picture and the right edge of the raster (Figure 2B, #2). Use the Horizontal Phase trimpot to move the picture halfway through that space (see Figure 2C).

7. Put a small drop of the specified glue on the trimpot, to hold it in place. Be careful not to cover up the name of the trimpot or the resistor number (e.g., R34, R22).

BRIGHTNESS AND CONTRAST ADJUSTMENTS

1. Turn down the brightness control on the back of the Lisa until the raster just disappears and only the Lisa picture is visible.

2. Find the contrast trimpot (CONT) on the top of the video board. Turn the contrast trimpot to the maximum setting that does not distort the shape of the screen. If this causes the edges of the raster to become visible again, turn down the brightness control on the back of the Lisa until the raster is invisible again.

3. Turn down the contrast until the screen looks right. Then turn it down just a little more, so that the screen looks slightly darker than you would want it for actual use.

4. Put a small drop of the specified glue on the contrast trimpot, to hold it in place. Be careful not to cover up the name of the trimpot.

These are the proper hardware settings for brightness and contrast. From this point on, the contrast of the screen should be changed only by using the Preferences menu.

CALLING UP THE VIDEO CROSSHATCH PATTERN

The rest of the video adjustments require that you match a crosshatch pattern on the CRT screen to an alignment graticule placed over the screen. To call up the video crosshatch pattern from LisaTest, use the following procedure.

1. If the grey test screen is still displayed, first hit any key to return to the "desktop". Then click in the box that says "OK", and the box will disappear.

2. Next, pull down the Options menu and choose "Check". From the "Check" window choose the crosshatch icon and click "OK". When the Note screen appears, read the note and then click "OK". The crosshatch pattern will then appear on the screen. (To return to the desktop, press any key.)

3. Place the alignment graticule (Figure 3) on the Lisa screen. Note that for each crosshatch line there are three marks on the graticule: the middle mark is the ideal setting, the two outer marks define the tolerance. Always try to get as close as possible to the ideal mark, as the adjustments will probably shift somewhat after you make them.

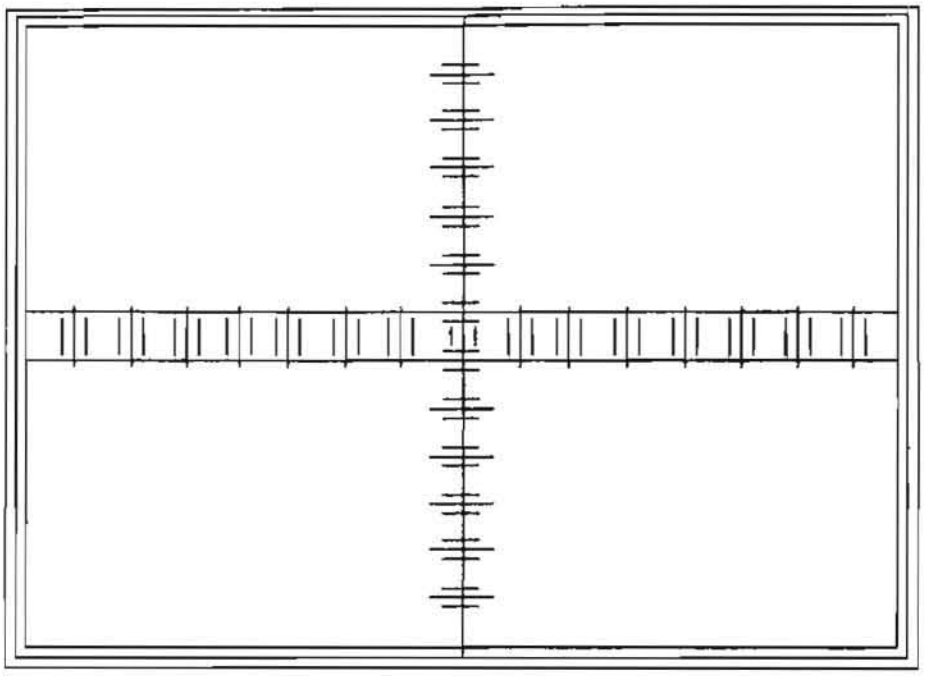

Figure 3

YOKE ADJUSTMENT

The yoke affects the orientation of the picture on the physical screen: if you rotate the yoke, the entire picture rotates around its center. (Turning the yoke does not affect the shape or focus of the picture, only its orientation.) If the center vertical of the crosshatch pattern is not parallel to the graticule's center vertical, adjust the yoke as follows.

1. Remove all metal objects from your hands and arms. Put on the safety goggles to protect your eyes. Put on the rubber gloves to protect you from scratches in case you draw your hand out quickly. Keep one hand in your pocket or behind your back during these adjustments.

2. With a medium or small flatblade screwdriver, carefully loosen the yoke clamp screw (Figure 4, #1). Rotate the yoke by gripping it on the plastic section near the centering rings, until the center vertical of the crosshatch is parallel to the center vertical on the graticule.

3. Make sure the yoke is pushed fully forward on the CRT neck; then carefully tighten the screw on the yoke clamp: it should be tight enough to prevent the yoke from turning, but not so tight as to crack the tube.

   IMPORTANT: If the yoke is not pushed forward sufficiently, the vertical and horizontal lines of the crosshatch pattern will not be perpendicular to each other.

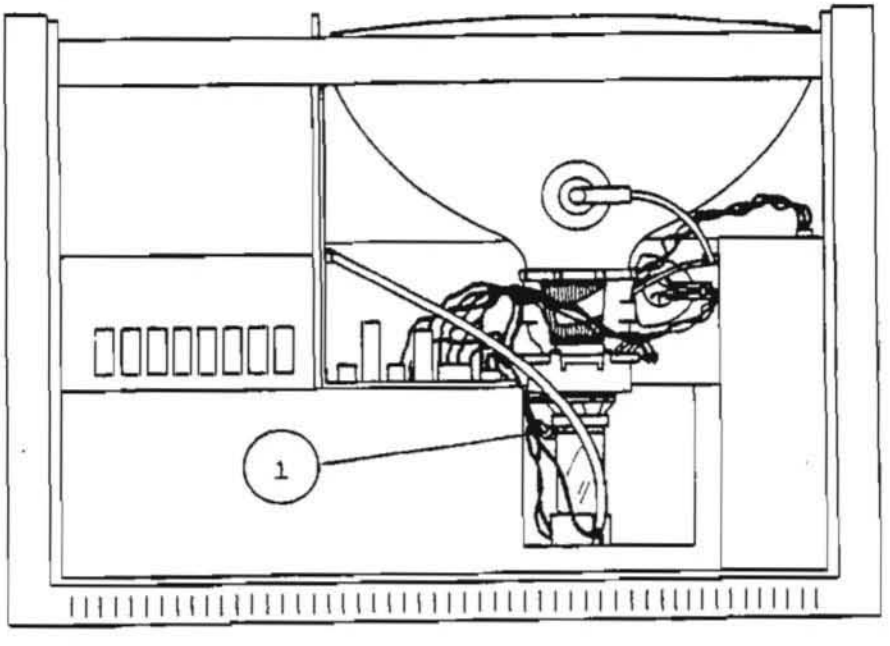

Figure 4

HEIGHT, WIDTH, VERTICAL LINEARITY TRIMPOTS AND CENTERING RINGS

By adjusting the video board height, width, and vertical linearity trimpots in combination with the centering rings, you should be able to make the crosshatch pattern fit within the graticule's tolerance markings. You may notice curves or bends in the pattern at various points; don't worry about them at this point. You can correct for such distortions by adding small magnets to the yoke collar (see next section).

The rings are magnets that control the position of the picture on the screen. Each time you adjust a trimpot, you will have to recenter the picture using the rings, because the trimpots affect the centering. It is easier to recenter the picture after each trimpot adjustment than to wait until all adjustments are made. The following has proved to be the easiest and most efficient method for making these adjustments.

1. Using yoke and centering rings, make sure the center vertical on the video crosshatch is parallel to the center vertical on the graticule, and within the tolerance markings.

2. Using the Width trimpot, adjust the picture until the left and right borders are within graticule tolerance.

3. Recenter the picture using the rings and yoke, if necessary; use the center vertical as your guide.

4. Adjust the upper and lower borders of the picture to graticule tolerance using the Height trimpot. Readjust width and recenter picture if necessary.

   NOTE: You will probably see some slight distortion at the upper and lower right corners. Don't worry about this; you will correct for it later.

5. Check the height, width, centering and orientation of the picture against the graticule again. Repeat steps 1-4 if necessary.

6. Adjust the Vertical Linearity trimpot so that the horizontal lines of the crosshatch pattern are within graticule tolerance.

7. Readjust height and recenter picture if necessary. (The vertical linearity adjustment will affect height and centering.) If you did have to readjust height or centering, then recheck vertical linearity and readjust if necessary. Then recheck height and centering.... et cetera. These controls affect each other, so they must be adjusted and readjusted in this way.

8. Step away from the unit and look away for a moment. Then inspect the picture again. Readjust if necessary.

9. If you see bent or distorted lines in the crosshatch pattern, adjust the magnets on the yoke (see next section). If not, put a small drop of the specified glue on the rings and one on each trimpot, to hold them in place. Be careful not to cover up the name of the trimpot or the resistor number (e.g., R34, R22).

MAGNET ADJUSTMENTS

After adjusting the picture as well as you can with the trimpots and rings, examine the crosshatch pattern for any distortions: curves or bends in the lines can be corrected by placing magnets around the yoke.

The magnets come in four strengths, according to the following color code:

yellow	=	5 gauss
red	=	7 gauss
blue	=	11 gauss
green	=	15 gauss

On yokes with spokes, simply place the magnet on the appropriate spoke and rotate the magnet until the distortion is corrected. If your weakest magnet is too strong for the correction you need, cut pieces off it with the dikes until it is the proper strength.

To apply magnets on spokeless yokes, put a small piece of magnet in a wad of Funtak. Find the spot on the yoke corresponding to the distorted area of the crosshatch, and stick the magnet on.

NOTE: To apply magnets to the bottom of the yoke, you may need to rotate the yoke so that the area is accessible. To do this, loosen the yoke collar screw and rotate the yoke as far as necessary. When finished, rotate the yoke back to normal position and retighten the screw.

Once you have adjusted the magnets, use a drop of the specified glue to hold each in place. Then recheck the trimpot adjustments. When you are satisfied with the adjustments, put a small drop of the specified glue on the rings and one on each trimpot. Be careful not to cover up the name of the trimpot or the resistor number (e.g. R34, R22).

FINISHING UP

Turn off the Lisa. Let it sit in your shop overnight, to give the glue time to dry. In the morning, turn it on, let it warm up for 10 to 15 minutes, and check it with the alignment graticule to make sure that the adjustments have held.

apple computer

Lisa Technical Procedures

Section 5

Diagnostics

Contents:

Interpreting the Boot ROM.....5.3
Using LisaTest.....5.3
Setting Diagnostic Controls.....5.4
Running a Complete System Check.....5.4
Running Individual Tests.....5.4
Brief Descriptions of Tests.....5.5

INTERPRETING THE BOOT ROM

On power-up, the Lisa will automatically perform a self-test using the program in its boot ROM. As the CRT warms up (approximately 30 seconds after power-up), the monitor will display 4 icons representing the CPU, I/O, memory, and expansion cards as they are being tested. Each icon will be highlighted in sequence as the boot ROM checks them.

The boot ROM diagnostics are an overview of the system. If the system passes, you can use LisaTest for further testing. If one of the cards is faulty, its icon will be presented on the screen with an "X" through it. The testing will stop. You should try to reseat the board and power-up again. If you get that error message again, swap out the board.

USING LISATEST

NOTE: IN ORDER TO USE THE LISATEST DISKETTES, THE LISA MUST HAVE TWO MEMORY BOARDS INSTALLED.

1. If the Lisa is turned on, turn it off by pressing the on-off button once.

2. Power up the Lisa.

3. When you hear the first click, (when the four boot ROM icons are on the screen but have not all been checked off yet), press SPACEBAR.

   A startup menu with disk drive 1, 2, and ProFile icons will appear on the screen.

4. Insert the LisaTest diskette in drive 1.

5. Select the disk drive 1 icon.

6. Select CONTINUE.

   The diskette boots and the Lisa displays a page of instructions.

   (You can return to the instructions by selecting "Hints" from the options menu.)

7. To access the options menu hit any key or use the mouse to pull down the options menu.

SETTING DIAGNOSTIC CONTROLS

Here you can change how a test is run, that is, once or continuously. You would select continuously to find intermittent errors.

1. Select Set Diagnostic Controls from the options menu.

   The defaults are," run once" for the diagnostic tests and "do not print error messages to printer."

2. To return to the menu bar and therefore the capability of accessing the options menu, select the CANCEL icon.

RUNNING A COMPLETE SYSTEM CHECK

You would use this selection if you have no idea what is causing an error.

1. Select "Run Complete System Check" from the options menu.

   NOTE: The first few tests will require input from the user. Follow the instructions displayed on the screen.

RUNNING INDIVIDUAL TESTS

NOTE: It is possible to select the icons by using the keyboard or the mouse. To use the keyboard, hold down the "Apple" key while pressing the letter or number indicated at the right of the icon you want to select.

1. Select "Check" from the options menu.

   Lisa now displays the icons for the diagnostics.

2. Selecting the test.

   1) Select the icon for the test you are interested in, and

   2) Select "OK". (Selecting "Cancel" would return you to options.)

BRIEF DESCRIPTIONS OF TESTS

KEYBOARD verifies the keyboard interface and the operation of all keys. To run this test the "CAPS LOCK" key should be in the up position

This diagnostic requires some input from the user. This includes:

1. The user has to select "OK" to the note asking you to avoid pressing any keys when you unplug and plug in the keyboard.

2. Unplug and plug-in the keyboard on request from the diagnostic. This request will appear after you have selected "OK" for the note asking you to avoid pressing any keys when you unplug and plug in the keyboard.

3. Enter each key individually as it is pointed to by the cursor. Do this carefully. If you hear an error tone you may have depressed an incorrect key. In order to correct this error, depress the key until the arrow goes to the next key. If a wrong key is depressed more than two times the diagnostic assumes the keyboard has failed. To avoid having to complete the entire test after you have received the failure message, press the ON-OFF switch once and the keyboard failure message is displayed. Click "OK." Press the ON-OFF switch again to return to options.

   Note: Do not touch the mouse while running the keyboard test.

   Note: The "CAPS LOCK" key must be depressed twice (i.e., it must be first locked down and then released) while testing the keys (this is indicated by the arrow).

MOUSE The mouse test is comprehensive and exceedingly sensitive. If the mouse passes the first two subtests you can conclude that the mouse is good. After running these two tests, simultaneously depress the "APPLE" and "." (on the alphanumeric part of the keyboard) to terminate the mouse test.

Button test For the button subtest read all of the instructions on the screen before holding down the mouse button. When the button is held down you will receive a "please release the mouse button" message. Follow these instructions. Be sure to wait for the commands to be displayed before acting. Otherwise, the test will assume the mouse has failed.

Basic movement For the basic movement subtest it is only important that you move the cursor so that it touches the four corners of each of the two rectangles. If you do this, the mouse will pass. Note, the coordinates which are displayed in the upper right corner of the screen need not exactly reflect the coordinates displayed at the corners of the rectangles.

Note: Do not depress any keys while running the mouse test.

LOWER DRIVE (The options menu will display "Upper Drive" if you have LisaTest in the lower drive.) The disk drive tests verify the operation of both disk drives by testing that certain parameters are within specifications (e.g., the motor speed). It also verifies the diskette/disk drive operation with a complete diskette surface test. This test takes a while so have patience.

DOT MATRIX verifies the functions of the dot matrix printer. This test requires user input. The last part of the test takes 6 minutes. Simultaneously depress the "APPLE" and "." (on the alphanumeric part of keyboard) to terminate the printer test.

The printer should be on and in select mode when you respond to the LisaTest question concerning the port off which the printer is running. Next, select "Run." The first three steps after you select run can be confusing. Here is what you should do.

1. Place the paper at top of form and turn the printer off.

2. Select "CONTINUE."

   You will receive a technical difficulties message. On a good printer this is supposed to happen.

3. Turn on the printer and select "CONTINUE."

Now you can proceed with step 4 displayed on the CRT.

If the printer stops and displays an "experiencing technical difficulties message" at the Electronic Vertical Format (EVFU) test, select "CONTINUE." This does not necessarily mean the printer is bad. If you receive other such messages, keep selecting "CONTINUE" until the test is complete.

Attached you will find a copy of the printer test. Compare it with the printout you receive from running the test.

DAISY WHEEL verifies the functions of the daisy wheel printer. You must use the tractor feed while running this test. This test requires user input. Be sure the printer switches are set correctly before you run the test. (See the Setup section of these procedures for correct switch settings.)

Early in the test you may receive an extended beep with the printed message "internal loop back test FAILED." If you do, wait for the alert message to be displayed, turn off the printer, turn it back on, and select "CONTINUE." The printer functions will then be exercised for the next 12 minutes. To terminate the printer test early, simultaneously depress the "APPLE" and "." (on the alphanumeric part of the keyboard).

Attached you will find a copy of the printer test. Compare it with the printout you receive from running the test.

CPU verifies the logic on the CPU. It verifies the operation of the boot ROM, the memory management unit of the CPU board, and the video timing circuitry.

MEMORY tests all the RAM chips in both memory boards and identifies the size and location of memory in the Lisa. The memory board test takes about five minutes so have patience.

IOBOARD verifies the operation of the floppy diskette controller, serial and parallel ports, and the keyboard/mouse interface.

PROFILE verifies the Lisa/Profile communication and the RAM buffer, it checks the status block and does a block scan.

CROSSHATCH is the grid used for video adjustments. As

in the Lisa Video Adjustments procedure.

GRAY is also used for video adjustments.

PARALLEL INTERFACE CARD requires a loopback plug to work. Dealers and Service Representatives are not expected to test this module.

BACKUP LISATEST is the LisaTest copy facility.

A P P L E D O T M A T R I X P R I N T E R. (Rev 1.7)

Carriage return test, LF and not LF included.
...This line is printed with CR only.
...These two lines use the CR and LF mode.
They should each be on a separate line.

Print methods test.
This line should appear after you click Continue a second time.

Print direction test.

This line should come out left-to-right,	- (bidirectional test)
and this line should come out right-to-left.	- (bidirectional test)
This line snould come out left-to-right,	- (bidirectional test)
and this line should come out right-to-left.	- (bidirectional test)
This line should come out left-to-right.	-(unidirectional test)
This line should come out left-to-right.	-(unidirectional test)
This line should come out left-to-right.	-(unidirectional test)
This line should come out left-to-right.	-(unidirectional test)

Select control test.
...DC1 and DC3 effective test.
...DC1 and DC3 ineffective test.

Left margin test.
A B C D E F G H I J K L M N O P Q R S T U V W X Y Z [\ ] ^ _ ` a b c d e f g
f e d c b a ` _ ^] \ [Z Y X W V U T S R Q P O N M L K J I H G F E D C B A

Line spacing test.
Base

```
        ____________________________________________________
        ...................................................
                  111111111122222222223333333333444444444
        123456789012345678901234567890123456789012345678
        ...................................................
```

Paper direction on line feed test.

1. Written 1st	1	1
2. Written 5th	2	2
3. Written 6th	3	3
4. Written 2nd	4	4
5. Written 3rd	5	5
6. Written 8th	6	6
7. Written 7th	7	7
8. Written 4th	8	8
9. Written 9th	9	9
10. Written 10th (last).	0	0

Alignment test.
H HH H H Left>Right and Right>Left alignment. HH H H HHH H
H HH H H Check alignment of H edges within one dot. HH H H HHH H

Special characters for all languages.

Language Hex-Code >	23	24	40	5B	5C	5D	5E	60	7B	7C	7D	7E
U.S.A.	#	$	@	[	\	]	^	`	{	|	}	~
U.K.	£	$	@	[	\	]	^	`	{	|	}	~
GERMANY	#	$	§	Ä	Ö	ü	^	`	ä	ö	ü	ß
FRANCE	£	$	à	°	ç	§	^	`	é	ù	è	¨
ITALY	£	$	§	°	ç	é	^	ù	à	ò	è	ì
SWEDEN	#	$	@	Ä	Ö	Å	^	`	ä	ö	å	~
SPAIN	£	$	§	¡	Ñ	¿	^	`	°	ñ	ç	~

Print pitch test.

```
Proportional print.   . ABCDEFGHIJKLMNOPQRSTUVWXYZabcdefghijklmnopqrstuvwxyz
                       1234567890!@#$%^&*()-_=+[{]};:,.<>/?
PICA (80).            . ABCDEFGHIJKLMNOPQRSTUVWXYZabcdefghijklmnopqrstuvwxyz
                       1234567890!@#$%^&*()-_=+[{]};:,.<>/?
ELITE (96).           . ABCDEFGHIJKLMNOPQRSTUVWXYZabcdefghijklmnopqrstuvwxyz
                       1234567890!@#$%^&*()-_=+[{]};:,.<>/?
Compressed.           . ABCDEFGHIJKLMNOPQRSTUVWXYZabcdefghijklmnopqrstuvwxyz
                       1234567890!@#$%^&*()-_=+[{]};:,.<>/?
SPECIAL (120).        . ABCDEFGHIJKLMNOPQRSTUVWXYZabcdefghijklmnopqrstuvwxyz
                       1234567890!@#$%^&*()-_=+[{]};:,.<>/?
SPECIAL (72).         . ABCDEFGHIJKLMNOPQRSTUVWXYZabcdefghijklmnopqrstuvwxyz
                       1234567890!@#$%^&*()-_=+[{]};:,.<>/?
SPECIAL (144).        . ABCDEFGHIJKLMNOPQRSTUVWXYZabcdefghijklmnopqrstuvwxyz
                       1234567890!@#$%^&*()-_=+[{]};:,.<>/?
```

...Double width.

```
Proportional print. ABCDEFGHIJKLMNOPQRSTUVWXYZab#
PICA (80). ABCDEGHIJKLMNOPQRSTUVWXYZa#
ELITE (96). ABCDEFGHIJKLMNOPQRSTUVWXYZabcdef#
Compressed. ABCDEFGHIJKLMNOPQRSTUVWXYZabcdefghijklmnopqrstuvwxy#
SPECIAL (120). ABCDEFGHIJKLMNOPQR#
SPECIAL (72). ABCDEFGHIJKLMNOPQRSTUVWXYZabcdefghijklmnopq#
SPECIAL (144). ABCDEFGHIJKLMNOPQRSTUVWXYZ#
```

Proportional print with dots between characters set.

```
6   123456789:;<=>?@ABCDEFGHIJKLMNOPQRSTUVWXYZ[\]^_`
    abcdefghijklmnopqrstuvwxyz{|}~
5   123456789:;<=>?@ABCDEFGHIJKLMNOPQRSTUVWXYZ[\]^_`
    abcdefghijklmnopqrstuvwxyz{|}~
4   123456789:;<=>?@ABCDEFGHIJKLMNOPQRSTUVWXYZ[\]^_`
    abcdefghijklmnopqrstuvwxyz{|}~
3   123456789:;<=>?@ABCDEFGHIJKLMNOPQRSTUVWXYZ[\]^_`
    abcdefghijklmnopqrstuvwxyz{|}~
2   123456789:;<=>?@ABCDEFGHIJKLMNOPQRSTUVWXYZ[\]^_`
    abcdefghijklmnopqrstuvwxyz{|}~
1   123456789:;<=>?@ABCDEFGHIJKLMNOPQRSTUVWXYZ[\]^_`
    abcdefghijklmnopqrstuvwxyz{|}~
```

Bit image graphics test.

...Scale IIII

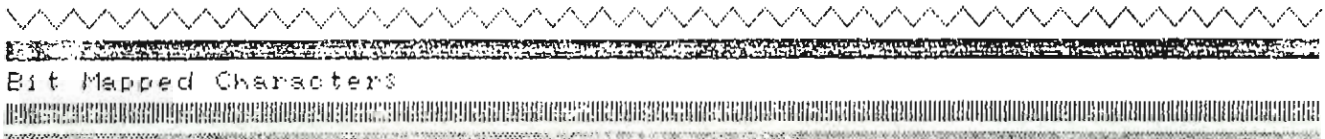

Bit Mapped Characters

Proportional #1 Bit Mapped Characters
PICA (80) Bit Mapped Characters
ELITE (96) Bit Mapped Characters
Compressed Bit Mapped Characters
SPECIAL (120) Bit Mapped Characters
SPECIAL (72) Bit Mapped Characters
Proportional #2 Bit Mapped Characters

Down-loaded character set test.

...Standard character set.

```
 !"#$%&'()*+,-./0123456789:;<=>?@ABCDEFGHIJKLMNOP
QRSTUVWXYZ[\]^_`abcdefghijklmnopqrstuvwxyz{|}~
```

...Down-loaded character set, 1-to-8 bits.

```
 !"#$%&'()*+,-./0123456789:;<=>?@ABCDEFGHIJKLMNOP
QRSTUVWXYZ[\]^_`abcdefghijklmnopqrstuvwxyz{|}~
```

```
Tabs test.
...Set and clear all tabs test.
         1111111111222222222233333333334444444444555555555566666666667777777777888888888999999
1234567890123456789012345678901234567890123456789012345678901234567890123456789012345678901234
 A  A  A  A  A  A  A  A  A  A  A  A  A  A  A  A  A  A  A  A  A  A  A  A  A  A  A  A  A  A  A  A
  B  B  B  B  B  B  B  B  B  B  B  B  B  B  B  B  B  B  B  B  B  B  B  B  B  B  B  B  B  B  B
    C  C  C  C  C  C  C  C  C  C  C  C  C  C  C  C  C  C  C  C  C  C  C  C  C  C  C  C  C  C  C
...Selectively clear tabs test.
         1111111111222222222233333333334444444444555555555566666666667777777777888888888999999
1234567890123456789012345678901234567890123456789012345678901234567890123456789012345678901234
 abcabcabcabcabcabcabcabcabcabcabcabcabcabcabcabcabcabcabcabcabcabcabcabcabcabcabcabcabcabcabcabca
    abc   abc   abc   abc   abc   abc   abc   abc   abc   abc   abc   abc   abc   abc   abc   abc   a
 abcabcabcabcabcabcabcabcabcabcabcabcabcabcabcabcabcabcabcabcabcabcabcabcabcabcabcabcabcabcabcabca
 abc   abc   abc   abc   abc   abc   abc   abc   abc   abc   abc   abc   abc   abc   abc   abc   abc
 _1_  _2_  __3__  _4__  _5__  _6_  __7__  __8__  _9__  _10
 ONE  TWO  THREE  FOUR  FIVE  SIX  SEVEN  EIGHT  NINE  TEN

Cancel line command test.

The line between this and the header was cancelled.

Print enhancement test.
Bold off. This line is written with BOLD turned on. Bold off again.
Underline is off. This line will be underlined. Underline is off again.

Zero  slashed/not slashed test.
...These zeros are printed slashed:  0 0 0 0 0 0 0 0 0 0 0 0
...These are printed not slashed:    0 0 0 0 0 0 0 0 0 0 0 0

Backspace test.  APPLE  should be underlined.
           These characters require backspacing: = : 0 0 0 a

Repeat function command test.
...Character repeat test.      . 12345678901234567890123456789012345678901234567890
   A will be repeated 10 times: AAAAAAAAAA
   B will be repeated 40 times: BBBBBBBBBBBBBBBBBBBBBBBBBBBBBBBBBBBBBBBB
   C wiill be repeated 18 times: CCCCCCCCCCCCCCCCCC
   D will be repeated  5 times: DDDDD
   E will be repeated  2 times: EE
...Dot column repeat test.      .   /     /        /  /
   Repeat column for  25 times:
   Repeat column for  70 times:
   Repeat column for 140 times:
   Repeat column for 165 times:
   Repeat column for 300 times:
...Dot addressing test..  H  H     H   H   H   HH   H     H  H         H
                          H  H     H   H   H   HH   H     H  H         H

Electronic Vertical Format Unit (EVFU) test.
...Expect a form feed after this line is printed.
```

Date: 3-Jan-1998

MEMO

To: Mr. Jones
From: Your Favorite Company
Subject: Payment

Regarding your letter dated June 12, 1977 , your check was mailed Nov 23, 1981 . Please wait 3 weeks from this date.

Signed,
Your fiend

^ A P P L E - D A I S Y W H E E L P R I N T E R (Rev 1.3)

Software Version 1.6

DIP Switch 1: 11100111 DIP Switch 2: 10010000 DIP Switch FRONT PANEL: 00100001 1 - CLOSED 0 - OPEN

Internal loop back test PASSED

```
|!"#$%&'()*+,-./0123456789:;<=>?@ABCDEFGHIJKLMNOPQRSTUVWXYZ[®]©_`abcdefghijklmnopqrstuvwxyz§¶¡¯`£¢{\}´^^¨]¿ÄÖÜÅÑÆäöüåñéùèàìòæıçß¬•
Printer busy.
Auto line feed selected.
Printer in CHECK mode.
** OPERATOR ATTENTION REQUIRED **
Twintellect character sequence selected.

Print direction.
   Bidirectional test.
  This line should come out left-to-right        (Bidirectional test).
  ...and this line should come out right-to-left.(Bidirectional test).
  This line should come out left-to-right        (Bidirectional test).
  ...and this line should come out right-to-left.(Bidirectional test).
   Unidirectional test.
  This line should come out left-to-right.      (Unidirectional test).
  This line should come out left-to-right.      (Unidirectional test).
  This line should come out left-to-right.      (Unidirectional test).
  This line should come out left-to-right.      (Unidirectional test).


Paper direction on a line feed test.
   Full line feed test.
  1. Written 1st.            1      1
  2. Written 5th.            2      2
  3. Written 6th.            3      3
  4. Written 2nd.            4      4
  5. Written 3ed.            5      5
  6. Written 8th.            6      6
  7. Written 7th.            7      7
  8. Written 4th.            8      8
  9. Written 9th.            9      9
 10. Written 10th.           0      0

   1/2 line feed test.
  1. Written 1st.   2. Written 5th.
  3. Written 6th.   4. Written 2nd.
  5. Written 3ed.   6. Written 8th.
  7. Written 7th.   8. Written 4th.
  9. Written 9th.  10. Written 10th (last).
```

```
                    1  1
                   2  2
                  3  3
                 4  4
                5  5
               6  6
              7  7
             8  8
            9  9
           0  0
```

Enhancement test.

   Bold test.
Bold off. This line is written with BOLD turned on. Bold off again.

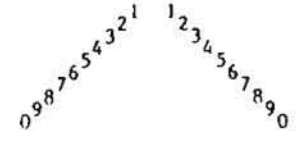

This entire line is written with BOLD1 turned on.
This entire line is written with BOLD2 turned on.
This entire line is written with BOLD3 turned on.
This entire line is written with BOLD4 turned on.

Underscore test.
Underscore is off. This line will be underlined. Underscore is off again.
This entire line is written with Underscore turned on. ABCDEFGHIJKLMNOP
ABCDEFGHIJKLMNOPQRSTUVWXYZabcdefghijklmnopqrstuvwxyz
1234567890!@#$%^&*()- =+[{]};:,.<>/?

Shadow test.
Shadow is off. This line will be shadowed. Shadow is off again.
This entire line is written with Shadow turned on. ABCDEFGHIJKLMNOP
ABCDEFGHIJKLMNOPQRSTUVWXYZabcdefghijklmnopqrstuvwxyz
1234567890!@#$%^&*()-_=+[{]};:,.<>/?

No Print test.
No Print is off. No Print is off again.
This password: should not be printed.

Backspace test. APPLE should be underlined.
Special made characters follow:- ¯ ö ë ø ß
123456789:;<=>?@ABCDEFGHIJKLMNOPQRSTUVWXYZ[\]^_`abcdefghijklmnopqrstuv
This line is printed using 1/120 backspace.

Carriage return test, LF (line feed) and not LF included.
...This line is printed with CR mode only.
...These two lines use the CR and LF mode.
They should each be on a separate line.

Left margin test.
1 2 3 4 5 6 7 8 9 : ; < = > ? @ A B C D E F G H I J K L M N O P Q R S T U V W
1 2 3 4 5 6 7 8 9 : ; < = > ? @ A B C D E F G H I J K L M N O P Q R S T U V W
1 2 3 4 5 6 7 8 9 : ; < = > ? @ A B C D E F G H I J K L M N O P Q R S T U V W
1 2 3 4 5 6 7 8 9 : ; < = > ? @ A B C D E F G H I J K L M N O P Q R S T U V W

Horizontal tab stop test.

AAARBBCCCDDDEEEFFFGGGHHHIIIJJJKKKLLLMMMNNNOOOPPPQQQRRRSSSTTTUUUVVVWWWXXXYYY

Tabs test.
...Set and all clear test.
1111111111222222222233333333334444444444555555555566666666667777777777888888888899999999
1234567890123456789012345678901234567890123456789012345678901234567890123456789012345678901234567890123456789012345
A A A A A A A A A A A A A A A A A A A A A A A A A A A A A A A A A A A A A A A A A A A A A A A A A A A A A A A A A A A A
B B B B B B B B B B B B B B B B B B B B B B B B B B B B B B B B B B B B B B B B B B B B B B B B B B B B B B B B B B B B
C C C C C C C C C C C C C C C C C C C C C C C C C C C C C C C C C C C C C C C C C C C C C C C C C C C C C C C C C C C C
...Selectively clear tab test.
1111111111222222222233333333334444444444555555555566666666667777777777888888888899999999
1234567890123456789012345678901234567890123456789012345678901234567890123456789012345678901234567890123456789012345
abcabcabcabcabcabcabcabcabcabcabcabcabcabcabcabcabcabcabcabcabcabcabcabcabcabcabcabcabcabcabcabcabcabcabcabcabcabcabca
abc abc abc abc abc abc abc abc abc abc abc abc abc abc abc abc abc abc abc abc abc abc abc abc abc abc abc abc abc abc
abcabcabcabcabcabcabcabcabcabcabcabcabcabcabcabcabcabcabcabcabcabcabcabcabcabcabcabcabcabcabcabcabcabcabcabcabcabca
abc abc abc abc abc abc abc abc abc abc abc abc abc abc abc abc abc abc abc abc abc abc abc abc abc abc abc abc abc abc
1 2 3 4 5 6 7 8 9 10
ONE TWO THREE FOUR FIVE SIX SEVEN EIGHT NINE TEN

Vertical spacing test.

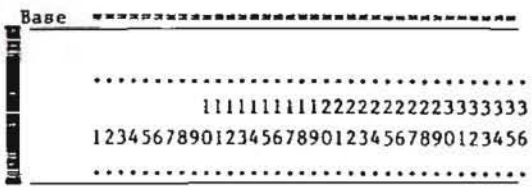

Alternate vertical spacing test.

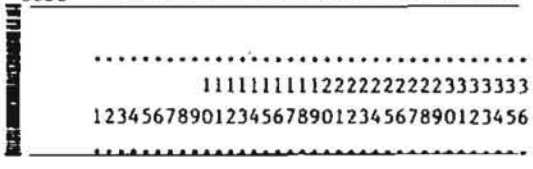

Right margin and auto CR/LF Test.

123456789:;<=>?@ABCDEFGHIJKLMNOPQRSTUVWXYZ[●]© ^abcdefghijklm

Bell test.

Absolute horizontal tab test.
AAAAABBBBBCCCCCDDDDDEEEEEFFFFFGGGGGHHHHHIIIIIJJJJJKKKKKLLLLLMMMMMNNNNNOOOOOPPPPPQQQQQRRRRR
RRRRRQQQQQPPPPPOOOOONNNNNMMMMMLLLLLKKKKKJJJJJIIIIIHHHHHGGGGGFFFFFEEEEEDDDDDCCCCCBBBBBAAAAA
Alternate absolute horizontal tab test.
AAAAABBBBBCCCCCDDDDDEEEEEFFFFFGGGGGHHHHHIIIIIJJJJJKKKKKLLLLLMMMMMNNNNNOOOOOPPPPPQQQQQRRRRR
RRRRRQQQQQPPPPPOOOOONNNNNMMMMMLLLLLKKKKKJJJJJIIIIIHHHHHGGGGGFFFFFEEEEEDDDDDCCCCCBBBBBAAAAA

Relative horizontal motion test.
13579;=?ACEGIKMOQSUWY[]_acegikmoq pnljhfdb``\ZXVTRPNLJHFDB@><:86420

Graphic modes.
1/60 inch graphic mode.

1/120 inch graphic mode.

Graphics modes off.

Language test.

```
     United States !"#$%&'()*+,-./0123456789:;<=>?@ABCDEFGHIJKLMNOPQRSTUVWXYZ
    Apple standard !"#$%&'()*+,-./0123456789:;<=>?@ABCDEFGHIJKLMNOPQRSTUVWXYZ
Apple alternate WP !"£$%&'()*+,-./0123456789:;<=>?§ABCDEFGHIJKLMNOPQRSTUVWXYZ
            Sweden !"#$%&'()*+,-./0123456789:;<=>?@ABCDEFGHIJKLMNOPQRSTUVWXYZ
           England !"£$%&'()*+,-./0123456789:;<=>?@ABCDEFGHIJKLMNOPQRSTUVWXYZ
            France !"£$%&'()*+,-./0123456789:;<=>?àABCDEFGHIJKLMNOPQRSTUVWXYZ
           Germany !"#$%&'()*+,-./0123456789:;<=>?§ABCDEFGHIJKLMNOPQRSTUVWXYZ
             Spain !"£$%&'()*+,-./0123456789:;<=>?§ABCDEFGHIJKLMNOPQRSTUVWXYZ
             Italy !"#$%&'()*+,-./0123456789:;<=>?@ABCDEFGHIJKLMNOPQRSTUVWXYZ
DIFFERENCES IN       +                                +

     United States [\]^_`abcdefghijklmnopqrstuvwxyz{|}~/|
    Apple standard [®]©_•abcdefghijklmnopqrstuvwxyz§¶†™/|
Apple alternate WP •çé^_ùabcdefghijklmnopqrstuvwxyzàðèì/|
            Sweden ÄÖÅ^_`abcdefghijklmnopqrstuvwxyzäöå~/|
           England [\]^_`abcdefghijklmnopqrstuvwxyz{|}~/|
            France •ç§^_`abcdefghijklmnopqrstuvwxyzéùè¨/|
           Germany ÄÖÜ^_`abcdefghijklmnopqrstuvwxyzäöüß/|
             Spain ¡Ñ¿^_`abcdefghijklmnopqrstuvwxyz•ñç~/|
             Italy [\]^_`abcdefghijklmnopqrstuvwxyz{|}~/|
DIFFERENCES IN     ++++ +                            ++++

     United States !"#$%&'()*+,-./0123456789:;<=>?@£¢{\}´^^¨¡¿ÄÖÜÅÑÆäöüåñéùèà
    Apple standard !"#$%&'()*+,-./0123456789:;<=>?@£¢{\}´^^¨¡¿ÄÖÜÅÑÆäöüåñéùèà
Apple alternate WP !"#$%&'()*+,-./0123456789:;<=>?@£¢{\}´^^¨¡¿ÄÖÜÅÑÆäöüåñéùèà
            Sweden !"#$%&'()*+,-./0123456789:;<=>?@£¢{\}´^^¨¡¿ÄÖÜÅÑÆäöüåñéùèà
           England !"#$%&'()*+,-./0123456789:;<=>?@£¢{\}´^^¨¡¿ÄÖÜÅÑÆäöüåñéùèà
            France !"#$%&'()*+,-./0123456789:;<=>?@£¢{\}´^^¨¡¿ÄÖÜÅÑÆäöüåñéùèà
           Germany !"#$%&'()*+,-./0123456789:;<=>?@£¢{\}´^^¨¡¿ÄÖÜÅÑÆäöüåñéùèà
             Spain !"#$%&'()*+,-./0123456789:;<=>?@£¢{\}´^^¨¡¿ÄÖÜÅÑÆäöüåñéùèà
             Italy !"#$%&'()*+,-./0123456789:;<=>?@£¢{\}´^^¨¡¿ÄÖÜÅÑÆäöüåñéùèà
NO DIFFERENCES.

     United States [®]© •ìðæıçß¬•ijklmnopqrstuvwxyz§¶†™/|
    Apple standard [®]©_•ìðæıçß¬•ijklmnopqrstuvwxyz§¶†™/|
Apple alternate WP [®]©_•ìðæıçß¬•ijklmnopqrstuvwxyz§¶†™/|
            Sweden [®]©_•ìðæıçß¬•ijklmnopqrstuvwxyz§¶†™/|
           England [®]©_•ìðæıçß¬•ijklmnopqrstuvwxyz§¶†™/|
            France [®]©_•ìðæıçß¬•ijklmnopqrstuvwxyz§¶†™/|
           Germany [®]©_•ìðæıçß¬•ijklmnopqrstuvwxyz§¶†™/|
             Spain [®]©_•ìðæıçß¬•ijklmnopqrstuvwxyz§¶†™/|
             Italy [®]©_•ìðæıçß¬•ijklmnopqrstuvwxyz§¶†™/|
NO DIFFERENCES.
```

Vertical tab test.

1 2
2 3
3 4
4 5
5 6
6 7
7 8
8 9
9 10
10 11
11 12
12 13
13 14
14 15
15 16
16 17
17 18
18 19
19 20
20 21
21 22
22 23
23 24
24 25
25 26
26 27
27 28
28 29
29 30
30 31
31 32
32 33
33 34
34 35
35 36
36 37
37 38
38 39
39 40
40 41
41 42
42 43
43 44
44 45
45 46
46 47
47 48
48 49
49 50
50 51
51 52
52 53
53 54
54 55
55 56
56 57
57 58

Horizontal spacing test.
   Standard horizontal spacing test.
01234567890123456789012345678901234567890123456789012345678901234567890123456789012345678901234567890123456789012345678
0123456789012345678901234567890123456789012345678901234567890123456789012345678901234567890123456789012345678901234567890123

   Alternate horizontal spacing test.
01234567890123456789012345678901234567890123456789012345678901234567890123456789012345678901234567890123456789012345678
0123456789012345678901234567890123456789012345678901234567890123456789012345678901234567890123456789012345678901234567890123

Carriage print direction.
 This text line is printed using normal foward print mode.
   This text line is printed using special Backward print mode.
 This text line is printed using both Foward and Backward print modes.

  This line is printed using no escapement mode.

Vertical relative motion test.

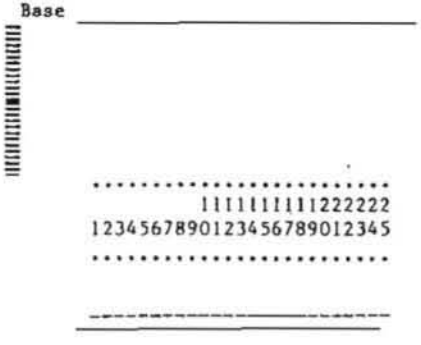

apple computer

Lisa Technical Procedures

Section 6

Troubleshooting

Contents:

Introduction.....6.2
Troubleshooting Table.....6.3

Procedures:
  Power Repair Procedure.....6.11
  Start-up Repair Procedures and Error Tones 6.13
  Start-up Error Icons.....6.14
  Start-up Error Codes.....6.16
  Video Repair Procedure.....6.19
  Mouse Repair Procedure.....6.24
  System Hang Repair Procedure.....6.25
  Profile Repair Procedure.....6.26
  Keyboard Repair Procedure.....6.27
  Printer Repair Procedure.....6.28
  Disk Drive Repair Procedure.....6.30

Appendix A. Office System Error Messages.....6.33

Appendix B. Operating System Error Messages.....6.41

These procedures are appropriate for use with the Lisa 1.0, Lisa 2, Lisa 2/5, and Lisa 2/10. (See diagrams below to distinguish among the four Lisas.)

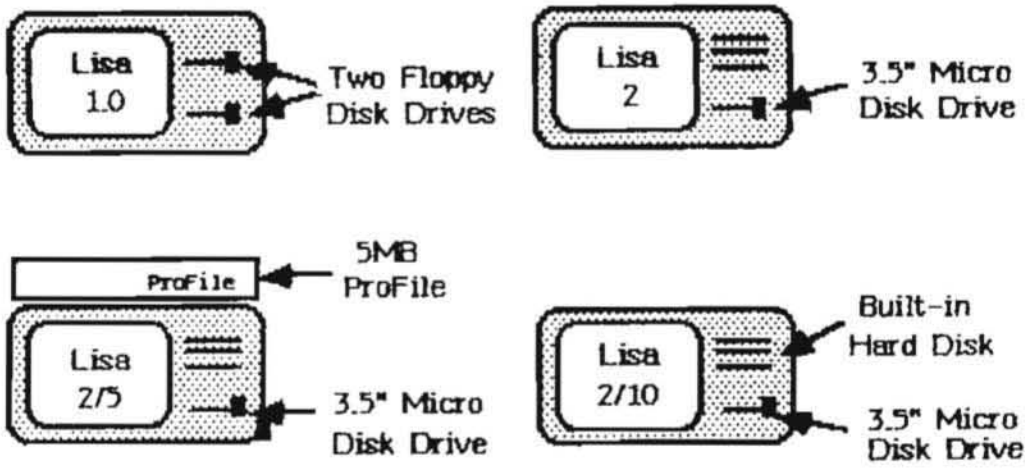

TROUBLESHOOTING GUIDE

The Troubleshooting Guide has two parts: the Troubleshooting Table and the Procedures. If you have an idea where the problem lies go directly to the appropriate procedure. If you have no idea what the problem may be or if you were unsuccessful when using the procedures, use the Troubleshooting Table.

The table and the procedures will often list more than one "correction", "fix", or "probable failure" per symptom. Attempt the corrective actions in sequence, testing to see if you have fixed the problem after each one.

When a procedure gives a list of modules or boards that may be at fault, swap out the suspect module and replace it with a known good one from your spares kit. Then power-up and run the test again. If you still receive the error return the original module to the Lisa and try swapping out the next item on the list. Repeat the procedure until you do not receive the error. The module you replaced just prior to receiving no error was the faulty one.

TROUBLESHOOTING TABLE

The Troubleshooting Table, which begins on the following page, examines the Lisa system sequentially, starting with the most central functions. The table is laid out in four columns across two facing pages and should be read from left to right. The four columns, from left to right, are as follows:

1) **TROUBLESHOOTING STEP:** what action you are to perform;

2) **EXPECTED INDICATIONS:** what is supposed to happen to the system as a result of the action you just performed, assuming everything is functioning correctly;

3) **PROBLEM INDICATION:** what might have happened to the system as a result of performing the Troubleshooting Step if the system is not functioning correctly; and,

4) **CORRECTIVE ACTION:** what you should do if you have experienced a problem (as noted in the previous column).

When using this table you will be working down the page through column one, looking at column two to see if everything is correct so far, and looking at columns three and four only if things are not occurring as expected.

The Troubleshooting Table will sometimes refer you to the procedures which follow the table.

TROUBLESHOOTING STEP	EXPECTED INDICATIONS
1. If the Lisa is not already off, turn it off by using the soft power switch or program instructions.	1. ON/OFF Lamp should go out.
2. *a) Clear parameter memory by removing the back panel, then toggling SW1 on the I/O board to the OFF position. Do not remove the I/O board. b) Toggle it back after approximately 5 seconds. (NOTE: Clearing parameter memory erases all preference settings. This means that after repair, you will have to use the Office System to reinstate your preference settings.) c) Reinstall the back panel, making sure that the knobs are finger tight.	2. No indications expected.
3. Turn the Lisa on.	3. a) ON/OFF Lamp should come on. b) Lisa will be silent for about 3 seconds, and then will emit a single click. c) As the picture tube warms up (approximately 30 seconds after power on), the monitor should display 4 icons representing the CPU, I/O, Memory, and Expansion cards. Each icon will be highlighted in sequence as the Boot ROM Test checks them. d) If a card fails, you will hear error tones, and its icon will be displayed with a big "X" through it. e) Or, and error icon and error code will be displayed.

*** Lisa 2/10 I/O board does not have a switch.**

PROBLEM INDICATIONS	CORRECTIONS
1. System may hang or the software may not be resident to perform the turn off function.	1. Go to System Hang Procedure.
2. No indications expected.	2. No corrective action.
3. a) The ON/OFF Lamp may not come on. b) The single "click" does not occur and/or unexpected tones are emitted. c) No picture after 30 seconds	3. a) Go to Power Repair Procedures. b) Push reset on back panel. If still does not boot go to Start-Up Repair Procedures. c) Go to Video Repair Procedures
d) Error Icon is displayed.	d) Go to Start-Up Icon Error Messages.
e) Error Icon and Error Code are displayed.	e) Go to Start-Up Error Codes.

TROUBLESHOOTING STEP	EXPECTED INDICATIONS
4. Insert LisaTest into the Drive.	4. The drive accepts and positions the heads on the diskette.
5. For Lisa 1, hold down APPLE and press 1 or 2 depending on which drive LisaTest is in. For Lisa 2, hold down APPLE and press 2.	5. Drive should load diagnostic and finally display instructions on the use of the diagnostic.

PROBLEM INDICATIONS	CORRECTIONS
4. a) Diskette difficult or impossible to insert	4. Check that: a) Diskette is properly inserted. Lisa 1 - label top right side Lisa 2 - arrow toward drive * - If still have problem, insert diskette in other drive - If diskette is accepted in second drive, replace first drive - If cannot insert diskette in second drive you probably have a bad diskette. Otherwise both disk drives are bad.
b) Disk drive makes very unusual noises.	b) Replace drive.
5. a) Disk drive does not start loading, and you do not get the instruction page.	5. a) Use mouse to select "STARTUP FROM". If disk drive works, replace keyboard. - If neither the keyboard nor mouse works, turn off the Lisa, reseat the I/O board, and try procedure again. - Replace I/O board.
b) Error icon and code displayed.	b) Go to Start-Up Error Codes.
c) "Warning test cannot be loaded" displayed on screen.	c) Insert another known good Diagnostic Disk and rerun procedure. * - If unsuccessful, insert the diskette in the other drive and rerun this procedure. If the procedure works with this drive, then replace the drive it did not work with.

*** In Lisa 2.0 replace the disk drive.**

TROUBLESHOOTING STEP	EXPECTED INDICATIONS
6. Use the mouse to select "Run Complete System Check."	6. The Lisa will display the "TEST" and "CONTINUE" buttons and description of the test.
7. Using the mouse, select "CONTINUE".	7. Diagnostic sequentially tests each module.

PROBLEM INDICATIONS	CORRECTIONS
	- If you still have the same problem, then replace memory board 2, and rerun this procedure. - If you still have the same problem, replace memory board 1.
d) Diskette does not boot completely, or the system may hang while booting.	d) Replace LisaTest diskette and rerun this procedure. - If unsuccessful, insert the diskette into the other drive and rerun this procedure. If the procedure works with this drive, then replace the drive it did not work with. - If you still have the same problem, replace the CPU board.
6. The mouse is properly connected to the Lisa but it does not work or the cursor is not displayed.	6. Go to Mouse Repair Procedures.
7. If a module fails its icon will be displayed.	7. Turn off the Lisa and replace the module.

POWER REPAIR PROCEDURES

If you think the Lisa is having power problems, attempt the following fixes in the order presented.

1. Check cables and power cord.

2. Verify that front and back panels are installed securely so interlock switches are active.

3. Verify wall outlet is functioning.

4. Verify secure connection of ribbon cable from motherboard to softswitch/keyboard assembly.

5. Verify 2" ventilation space around the Lisa.

6. If system may have overheated (90 C or 195 F), unplug the Lisa and let it cool down for an hour.

7. Swap out the modules in the following order:
   a) power supply
   b) I/O board
   c) softswitch/keyboard assembly
   d) front interlock switch
   e) disk drive to card cage connector
   f) motherboard
   g) videoboard

START-UP REPAIR PROCEDURES AND ERROR TONES

NOTE: Prior to diagnosing any problems in this section you should remove any expansion cards or other attachments from your Lisa and then push the reset button on the back. If the problem remains after the expansion cards have been removed, proceed to the troubleshooting chart below. If the problem disappears, replace the cards or attachments one at a time, restarting the system after each replacement. When the problem occurs again, the last module replaced is the module causing it.

SYMPTOM	PROBABLE FAILURE
Incorrect or no video, no "clicks", and no error tones.	- CPU - I/O - (Go to Video Repair Procedures) - Motherboard
No "clicks" and the display indicates that the Boot ROM Test found no problems.	- Speaker connections - I/O - Speaker
Blank screen and start-up "clicks."	- (Go To Video Repair Procedures)
Error tones with incorrect or no video.	
Lo	CPU Memory 1 Memory 2
Lo,Lo	Memory 2 CPU
Lo, Hi	Card Cage (swap out boards one at a time)
Lo, Lo, Hi	CPU
Lo, Hi, Lo	I/O

SYMPTOM	PROBABLE FAILURE
Hi, Hi, Hi	Peripheral Card
Lo, Hi, Hi	Memory 1 Memory 2
Hi, Lo, Lo	Expansion Boards
Hi, Lo, Hi	Keyboard
Hi, Hi, Lo	Keyboard or Mouse disconnected

START-UP ERROR ICONS

Swap out the module indicated by the Icon. If that is not successful swap out the subsequent modules listed here or look up the message code number in Start-up Error Codes.

ICON	MODULE AND OTHER POSSIBLE REPLACEMENTS
	- CPU
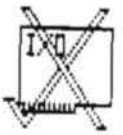	- I/O
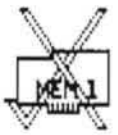	- Memory
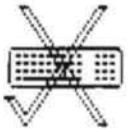	- Keyboard - I/O - Cable from motherboard to softswitch/keyboard assembly - Motherboard

	- Check Profile with LisaTest. If unsuccessful:
	  - Replace profile
	  - Replace I/O
	  - Replace Motherboard

ICON	MODULE AND OTHER POSSIBLE REPLACEMENTS
	- Replace Internal Hard Disk
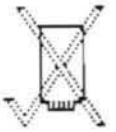	- Reseat Expansion Card - Try card in other slot - Swap in new card

Micro diskette
Floppy 5 1/4 inch diskette 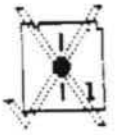
	- Bad diskette *
	- If other drive works replace:
	  - Drive
	  - Cable
	  - I/O
	  - Motherboard
	- If other drive fails try back-up diskette
	- If still fails then replace:
	  - I/O
	  - Cable
	  - Drive

	- Insert diskette

* Lisa 2 has one micro diskette and Lisa 1 has two 5 1/4 inch floppy diskettes.

APPENDIX D
START-UP ERROR CODES

NUMBER	PROBLEM	FIX
22	Unable to clamp diskette	Refer to start-up error messages for "bad diskette icon"
23	Unable to read diskette	" "
25	Unable to unclamp diskette	" "
38	No boot file on diskette	" "
39	Disk controller timeout	1. Replace I/O board 2. Replace CPU board 3. Replace Motherboard
40	MMU	Replace CPU board
41	CPU selection logic	Replace CPU board
42	Video circuitry	Replace CPU board
43	Parity circuitry	1. Replace CPU board 2. Replace Memory board 1 3. Replace Memory board 2 4. Replace Motherboard
44	NMI error	1. Replace CPU board 2. Replace I/O board 3. Replace Motherboard
45	BUS error	1. Replace I/O board 2. Replace CPU board 3. Replace Motherboard

NUMBER	PROBLEM	FIX
46	Address error	1. Replace CPU board 2. Replace Memory board 1 3. Replace Memory board 2
47	Exception	1. Replace CPU board 2. Replace Motherboard
48	Illegal instruction	1. Replace CPU board 2. Replace Memory board 1 3. Replace Memory board 2
49	1010 or 1111 trap	1. Replace CPU board 2. Replace Memory board 1 3. Replace Memory board 2
50	COPs VIA	1. Replace I/O board 2. Replace CPU board 3. Replace Motherboard
51	Parallel port VIA	1. Replace I/O board 2. Replace CPU board 3. Replace Motherboard
52	I/O board COPs	Replace I/O board
53	Keyboard COPs	1. Replace Keyboard 2. Replace I/O board 3. Replace Keyboard cable 4. Replace Motherboard
54	Clock error	Replace I/O board
55	RS232 port A	Replace I/O board
56	RS232 port B	Replace I/O board

NUMBER	PROBLEM	FIX
57	Disk controller	1. Replace I/O board 2. Replace Disk Drive 3. Replace Disk Drive cables 4. Replace CPU board 5. Replace Motherboard
58	I/O board access	1. Replace I/O board 2. Replace CPU board 3. Replace Motherboard
59	I/O board COPs code	Replace I/O board
60	I/O or Keyboard error	1. Replace Keyboard 2. Replace I/O board 3. Replace Keyboard cable 4. Replace Motherboard
70 or 71	Memory data or Memory parity	Replace the Memory board specified by the icon displayed.
75	Boot failure	Refer to start-up error messages for the icon shown
80-85	Profile errors	Refer to start-up error messages for "bad profile icon"
90-93	Expansion card error	Refer to start-up error messages for "bad expansion card icon"

VIDEO REPAIR PROCEDURES

WARNING: If you have never been taught how to adjust and replace the Lisa video modules do not attempt to do video repairs.

If you do not remember how to make one of the following video adjustments or replacements refer to the Video Adjustments job aid.

If the proposed procedures do not work see second note at the end of the table.

SYMPTOM	FIX
A sizzling noise coming from LISA	Replace power supply Adjust brightness Adjust contrast hardware Replace videoboard Replace flyback
Power supply trips (turns off & on)	Adjust brightness Adjust contrast hardware Replace power supply Replace videoboard Replace flyback
Blank screen and the CRT filament is NOT on when the LISA power is on	Check connections * Adjust brightness & contrast hardware Replace videoboard Replace CPU board Replace I/O board Replace power supply Replace flyback Replace CRT Replace motherboard
Blank screen and the CRT filament IS on when LISA power is on	Check connections * Adjust contrast hardware to middle range Replace power supply Replace videoboard Replace CRT Replace flyback Replace CPU board Replace motherboard

* See notes at the end of this table.

SYMPTOM	FIX
CRT too bright or too dim	Power LISA off & on again. Adjust brightness & contrast pots (Do not adjust contrast via software until the brightness and contrast are adjusted.)
Unable to adjust brightness	Replace power supply Replace videoboard Replace CRT Replace CPU board
Unable to adjust contrast on the videoboard	Replace videoboard Check the connections * Replace CRT Replace flyback Replace CPU board Replace power supply
Unable to adjust contrast by the software	Replace I/O board Replace CPU board Replace videoboard Check keyboard with keyboard diagnostics Replace motherboard
Blurred screen	Adjust focus
Unable to adjust focus	Replace power supply Replace videoboard Replace CRT Check connections Replace flyback
Rolling screen	Adjust vertical hold
Unable to adjust vertical hold (Picture keeps flipping or will not flip at all)	Replace videoboard Replace CPU board Replace I/O board Replace motherboard

* See notes at the end of this table.

SYMPTOM	FIX
Picture locked in wrong vertical position (i.e., picture begins in the middle of the screen)	Replace CPU board Replace videoboard Check connections * Adjust yoke
Small picture on CRT	Adjust height & width Adjust brightness & contrast Replace videoboard Replace flyback
Unable to adjust height with video pot	Replace videoboard Replace CPU board Replace I/O board Replace CRT
Unable to adjust width	Replace videoboard Replace CPU board Replace I/O board Replace CRT
Only a horizontal line on screen	Lower brightness & contrast Replace videoboard Replace CRT
Unable to adjust horizontal phase	Replace videoboard Replace CPU board Replace I/O board Replace flyback Replace motherboard Replace CRT
Unable to adjust vertical linearity	Replace videoboard Replace CPU board Replace I/O board Replace CRT Replace motherboard

* See notes at the end of this table.

SYMPTOM	FIX
Scalloped picture	Adjust video controls Replace videoboard Replace power supply Replace flyback Make magnetic adjustments
Image on CRT not centered or not straight	Adjust yoke controls and magnets
Bad deflection	Replace videoboard Replace CRT
No horizontal stability (out of phase)	Replace videoboard Replace CPU board Replace I/O board Replace CRT
Double images	Replace CPU board Check connections
Inverse video	Replace CPU board
No video content	Replace CPU board Replace I/O board Replace videoboard Check connections
Smeared screen	Replace CPU board Replace I/O board Replace videoboard Check connections
Burns on screen	Replace CRT and turn down contrast, brightness, and software

Notes will be found on following page.

* To "check connections" do the following:

1. Turn off the Lisa,
2. Unplug the Lisa power cord from the wall outlet,
3. Discharge the CRT and remove the flyback anode wire from the CRT,
4. Reconnect the flyback anode wire,
5. Remove and replace the video board,
6. Disconnect and reconnect each of the connectors that go to the video board,
7. Remove and replace the ground wire going from the back of the CRT to the chassis,
8. Make sure the connection on the back of the CRT tube is on snugly,
9. Remove and replace the power supply,
10. Remove the card cage,
11. Remove and reseat the CPU board,
12. Remove and reseat the I/O board,
13. Replace the card cage,
14. Plug the power cord into the Lisa, and
15. Plug the power cord into the wall outlet.

** If the Proposed Procedures do not work, check the video circuitry in the following order:

1. Adjust video controls,
2. Check the connections,
3. Replace the video board,
4. Replace the flyback,
5. Replace the CPU board,
6. Replace the I/O board,
7. Replace the power supply,
8. Replace the CRT, and
9. Replace the mother board.

MOUSE REPAIR PROCEDURES

SYMPTOM	FIX
Cursor is not displayed	- Remove and reinsert mouse plug - Replace mouse
Moving the mouse or pushing its button does not work	- Remove and reinsert mouse plug - Try keyboard plug - If keyboard input is successful, replace mouse - If keyboard and mouse do not work replace: - I/O - CPU - Motherboard
Arrow moves vertically or horizontally only	- Remove and reinsert mouse plug - Replace mouse - Replace I/O

apple computer

SYSTEM HANG PROCEDURE

Sometimes, usually because of software failures, Lisa ignores all input. The usual solution is to turn off the system and start over. Since Lisa's on-off button is channeled through the computer, however, turning the system off is not always possible.

Note: The reset button, marked <!> on the back of the Lisa, is the backup technique for bringing the system back up when the software fails. Pushing the reset button clears the computer's memory and reinitiates the system startup procedures. **Anything on the desktop that has not been put away is lost during a reset.**

Before you push reset, make every effort to save any work that was on the desktop:

1. If the mouse is not working, try the alternative keyboard commands for putting away active documents. (See the manual for the software you are using.)

2. Try pressing the disk-release buttons, which should cause LISA to save all documents and release the diskettes.

3. Try turning the system off by pressing the on-off button once, which should trigger a series of verification and storage procedures.

4. If the system does not respond to any of these techniqes, you will not be able to recover whatever you were working on when the system failed.

5. Press the reset button once.

6. If the system starts up normally, you probably do not have a hardware problem. See Section E: Desktop Manager Reference Guide, under "Repair a Disk After a System Crash", in any tool manual.

7. If LISA displays an error message or error tones, refer to the Start-up Repair Procedures, Start-up Error Icons, and Start-up Error Codes.

8. If the LISA still "hangs," unplug the system from the wall outlet. Turn it back on, and listen carefully for error tones.

PROFILE OR INTERNAL HARD DISK REPAIR PROCEDURES *

SYMPTOM	FIX
	NOTE: Do not attach or detach a Profile while either the Lisa or the Profile is on.
1. Profile or internal hard disk error icon is displayed while trying to boot.	a. Verify that your Profile or internal hard disk is properly attached. If Profile is not attached and it should be, follow this procedure: 1) Turn off the Profile. 2) Turn off Lisa. 3) Attach the Profile. 4) Turn on Profile 5) Turn on Lisa.
	b. If your Profile or internal hard disk is attached: 1) Turn off the Lisa. 2) Turn off the Profile. 3) Turn Profile back on. With internal hard disk turn on the Lisa. The disk's ready light flickers while it performs its self check. 4) The ready light comes on steadily after a successful self check. 5) If it does not, turn off and replace the hard disk. 6) Use LisaTest to test hard disk. 7) If hard disk fails, replace it. 8) If the hard disk passes LisaTest but still fails when the system is running, replace the hard disk.

* Hard disk refers to both the internal hard disk and the Profile.

KEYBOARD REPAIR PROCEDURES

SYMPTOM	FIX
1. The CPU will receive no inputs from the keyboard.	a. Remove keyboard plug completely from its jack and reinsert. b. Try using the mouse. c. If "b" works, replace keyboard. d. If neither "b" nor "c" works, depress Lisa's soft power switch. e. If Lisa turns off, reseat the I/O board, CPU board, and motherboard and try again. If no improvement swap these boards in sequence one at a time. f. If Lisa does not turn off when you push the on/off button, go to the System Hang Procedure.
2. One or more of the keys on the keyboard does not seem to be working but the rest do.	a. Replace the keyboard.

PRINTER REPAIR PROCEDURE

SYMPTOM	FIX
1. The printer misprints characters or will not print at all.	a. Check the connectors between the printer and Lisa for proper seating. b. Check the software to see if your printer is included in your configuration under "Preferences". c. If your configuration is correct and you have an Apple DWP: 1) Turn off the DWP and while pressing the form feed button, turn it back on. 2) Release the form feed button and the following text should print out. If it does not, repair or replace the printer.

DWP SELF CHECK PRINTOUT

```
+,-./0123456789:;<=>?@ABCDEFGHIJKLMNOPQRSTUVWXYZ[®]©_°abcdefghij
,-./0123456789:;<=>?@ABCDEFGHIJKLMNOPQRSTUVWXYZ[®]©_°abcdefghijk
-./0123456789:;<=>?@ABCDEFGHIJKLMNOPQRSTUVWXYZ[®]©_°abcdefghijkl
./0123456789:;<=>?@ABCDEFGHIJKLMNOPQRSTUVWXYZ[®]©_°abcdefghijklm
/0123456789:;<=>?@ABCDEFGHIJKLMNOPQRSTUVWXYZ[®]©_°abcdefghijklmn
0123456789:;<=>?@ABCDEFGHIJKLMNOPQRSTUVWXYZ[®]©_°abcdefghijklmno
123456789:;<=>?@ABCDEFGHIJKLMNOPQRSTUVWXYZ[®]©_°abcdefghijklmnop
23456789:;<=>?@ABCDEFGHIJKLMNOPQRSTUVWXYZ[®]©_°abcdefghijklmnopq
3456789:;<=>?@ABCDEFGHIJKLMNOPQRSTUVWXYZ[®]©_°abcdefghijklmnopqr
```

SYMPTOM	FIX
	d. If your configuration is correct and the printer is an Apple DMP: 1) Turn off the DMP, and while pressing the T.O.F. button turn it back on. 2) Release the T.O.F. button, and the following text should print out. If it does not, repair or replace the printer.

DMP SELF CHECK PRINTOUT

DISK DRIVE REPAIR PROCEDURE

NOTE: IF THE THE DISK DRIVE PROBLEM IS NOT DESCRIBED IN THE TABLE BELOW GO TO THE FLOWCHART ON PAGE 6.32.

SYMPTOM	FIX
1. The diskette is difficult or impossible to insert	a) For Lisa 1 check that the disk label is on the top right side of the disk when inserted. For the Lisa 2 micro diskette, make sure the arrow on the diskette is pointing toward the drive. b) Try inserting the disk in the other drive if applicable. c) If you can properly insert the disk in the other drive, then replace the original drive. d) If you cannot properly insert the disk in either drive, then try another disk.
2. system displays a bad disk icon, and an error code on startup.	a) Go to the Start-Up Error Codes.
3. You got a bad disk icon and an error code while operating your system on line.	a) Go to the Office System Error Messages in Appendix A.
*4. While your system is running one disk drive operates but the other one does not.	a) Check the cable connections inside Lisa between the problem drive and the motherboard. b) If the drive ribbon cable is secured properly to the motherboard and the drive, then replace the problem drive. c) Replace I/O Board. d) Replace motherboard.

*** Lisa 2, 2/5, and 2/10 have only one disk drive.**

SYMPTOM	FIX
*5. While your system is running neither disk drive will operate but the keyboard and/or mouse seem to work.	a. Check the cable connections between the drives and the motherboard.
	b. Replace I/O board.
	**c. Replace motherboard.
6. While your system is running the disk will not eject.	a. Check to see if you can input from the keyboard, mouse, disk eject button or the soft on/off button.
	b. Go to the System Hang Procedure.
	**c. Try loading a disk into the other drive and then ejecting it.
	d. If "c" works, replace original drive, if not, replace I/O board.

*** Lisa 2, 2/5, and 2/10 have only one disk drive.**

**** For Lisa 2, remove the front cover and manually eject the disk. Then, follow the flowchart on page 6.32.**

NOTE: Lisa must have two memory boards to use the Lisa Diagnostic diskette!

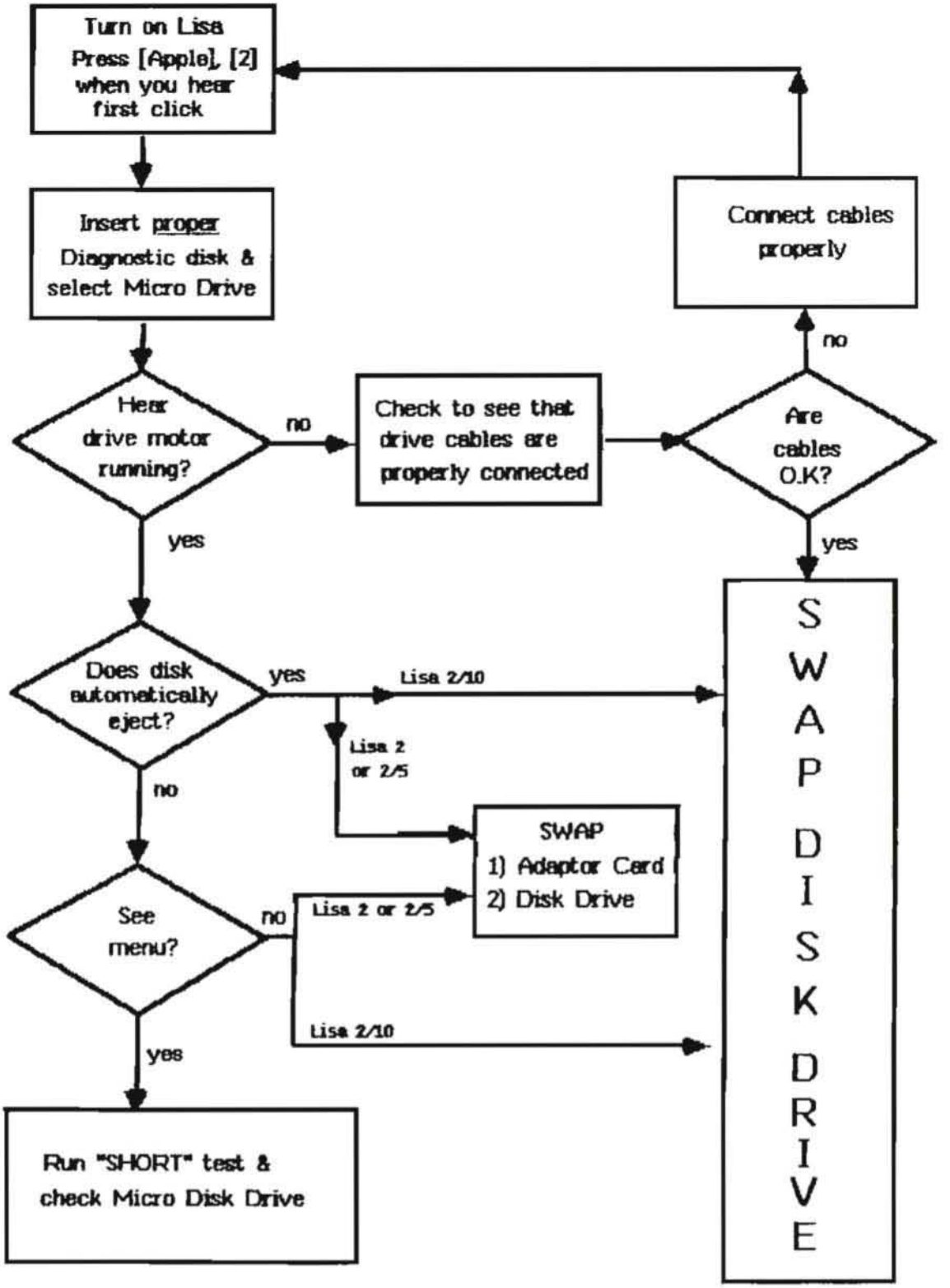

apple computer

APPENDIX A

OFFICE SYSTEM ERROR MESSAGES

This appendix contains a series of discussions covering the error messages generated by the Lisa Office System. The discussions are grouped into four general categories, with specific entries under each major heading. If you have encountered an error message, go to the specific entry mentioned in that message. If you think you may have a physical problem with your system, refer to Troubleshooting in this manual.

Disk Problems
- Insufficient Room on Disk
- Damaged Disk
- Difficulty Accessing Disk
- Disk Drive Problems

Document Problems
- Damaged Document
- Difficulty Opening Document
- Difficulty Saving Document

Tool Problems
- Tool Failure
- Difficulty Starting Tool
- Incompatible Version

System Problems
- Insufficient Memory
- System Restart
- Desktop State
- Difficulty Printing

DISK PROBLEMS

INSUFFICIENT ROOM ON DISK

Many common desktop operations -- opening or saving documents, for example -- require a certain amount of free disk space. When your disks become crowded, you can make more room in several ways:

Discarding Obsolete Documents Discard obsolete documents by moving their icons to the Wastebasket. The last thing you discard from a disk stays in the Wastebasket -- and on the storage disk -- until something else from the same disk is also discarded or you choose the **Empty "Wastebasket"** item in the **Housekeeping** menu after discarding the documents. Sometimes the Lisa destroys objects in the Wastebasket if it needs the disk space. Usually, however, the space occupied by an object is not actually reclaimed until you have thrown away another object from the same disk or chosen Empty "Wastebasket" in the **Housekeeping** menu. Therefore, if you are discarding a group of documents in order to make more room on the disk, choose **Empty "Wastebasket"** from the **Housekeeping** menu afterward.

Moving Objects You can move some objects to a different storage disk. Do not duplicate the object, because that will not remove the copy from the original disk.

Repairing the Disk You can repair the disk, following the procedures in Section C, Troubleshooting, under Disk Repair in the Lisa 2 Owner's Guide.

Special Case If you are using LisaList, choose **Show Entire List** from the **List** menu.

If, after you have made more space on the disk that holds the document, the Lisa still indicates that there is not enough room on the disk, check the Status panel of the start disk window to verify that there is also space available on the startup disk.

DAMAGED DISK

The Lisa may tell you that one of your disks is "damaged." This could mean either that some of the information stored on the disk has been altered or that the disk itself is physically damaged.

First, repair the disk following the procedures in Section C, Troubleshooting, under Disk Repair in the Lisa 2 Owner's Guide. The repair process verifies that all information on the disk is usable and that the record of where things are stored on the disk surface matches the actual contents of the disk. Unreadable information may be altered or removed; the names of some documents may change.

If the Lisa is unable to repair the disk, either the disk or the disk drive probably has a physical problem. If the disk in question is a floppy try inserting it in another drive in the same Lisa or (for Lisa 1) or another Lisa (for Lisa 2). If the other drive has no trouble with the diskette, then there may be something wrong with the first disk drive. If the other drive cannot read the diskette either, then the disk may have suffered physical damage. Use a backup copy of the diskette.

DIFFICULTY ACCESSING DISK

First, try restarting the system: put away all open documents, and then turn the Lisa off and back on again. When the desktop returns, try again to access the disk.

If this procedure works, your system was probably in a temporary error condition caused by the interaction of different tools and documents.

If restarting the system doesn't solve the problem, the most likely cause is a damaged document, disk, or tool. If you are trying to access a document, see Damaged Document. If that discussion does not address your problem, see Damaged Disk, and then, as a last resort, Tool Failure and Disk Drive Problems.

DISK DRIVE PROBLEMS

Sometimes a mechanical failure in a disk drive results in errors that appear to come from your documents or disks. You can verify that the drive in question is working properly by trying the disk in the other drive or in another drive in another Lisa.

If you find that the disk drive and not the diskette is at fault, have the drive repaired and repair any disks that were used in the damaged drive. A faulty disk drive could have permanently damaged a disk. If this is the case, you'll need to use the backup copy of the disk.

DOCUMENT PROBLEMS

DAMAGED DOCUMENT

A document can be damaged in a number of ways. The disk on which the document is stored could be wearing out, for example, or the document may have been damaged during a power failure. Sometimes a software failure leaves a document unreadable.

First, restart the system if you have not already done so. Put away all documents, and then turn the Lisa off and on again. Try again to open the document.

If the document still won't open, try to duplicate the document and put the duplicate on a different disk. If this works, the original disk is probably not damaged. Try to open the copy. If the Lisa reports that the copy is also damaged, the document itself probably contains some inconsistent or unreadable information. The Tool could also be damaged. If you are using LisaList, repair the document with the LisaList repair facility.

If you cannot make a duplicate of the document, try to make a copy of the entire disk. Whether or not the copy procedure works, repair the original disk following the instructions in Section C, Troubleshooting, under Disk Repair in the Lisa 2 Owner's Guide. If you are using LisaList, you will probably have to repeat the LisaList repair procedure. Be sure to make a new backup of the list first.

If the document is still damaged after the disk is repaired, discard the document and replace it with a backup copy.

DIFFICULTY OPENING DOCUMENT

Check the status panel of the document's storage disk to see how much free space is left on the disk. If the number of free blocks is approaching 200 or fewer, see Insufficient Room on Disk.

If the disk contains adequate free space, your document or the tool used to create it could be damaged. See Damaged Document; see also Tool Failure.

DIFFICULTY SAVING DOCUMENT

Check the status panel of the document's storage disk to see how much free space is left on the disk. If you have saved an earlier version of the document, change the disk display to an alphabetical view, and see how many blocks the document required in its earlier version. Estimate how much space the document now needs, on the basis of whether you have added or removed information. If there is inadequate space available, see Insufficient Room on Disk.

If disk space is not the problem, or if you do not want to remove anything to make room on the storage disk, you may be able to save the document by setting it aside and then moving it to another disk. Because some tools will not let you move a document that has not been saved, you may not be able to use this technique.

Difficulty saving a document could also indicate a damaged document. See Damaged Document.

TOOL PROBLEMS

TOOL FAILURE

Before you conclude that a tool is actually damaged, restart the system and try to repeat the failure. To restart the system, put away all documents, and then turn the Lisa off and on again. If the procedure works after a restart, the system was probably in a temporary error condition caused by the interaction of various tools and documents.

If the tool still fails, discard the working copy from your internal hard disk (or ProFile) and replace it with a duplicate of the master tool. If your dealer set up your startup disk, the working copies of all tools are stored in the folder labeled Tools on your startup disk. A diskette containing the master tool is stored in the manual that comes with each tool.

The calculator, the clock, the Preferences, and some of the printing routines are all part of the system software. If replacing the tool doesn't work, or if the problem was with this software in the first place, reinstall the system software on your startup disk. Instructions for reinstalling system software appear in Section C, Troubleshooting, under Procedure E, Disk Repairing and Reinstalling System Software in the Lisa 2 Owner's Guide.

DIFFICULTY STARTING TOOL

Check the status panel in the window of the disk that holds the tool and, if it is different, in the window of your startup device. If the number of free blocks is approaching 200 or fewer, see Insufficient Room on Disk.

If disk space is not the problem, see Tool Failure.

INCOMPATIBLE VERSION

From time to time, Apple releases updated versions of the Lisa software. If you buy an additional Lisa system more than six months after you bought your first Lisa System, the computers may come with different versions of the software. (If you have a support agreement, you will always have the most recent updates of all software.)

Old documents are usually compatible with new revisions of the tools. New documents, however, may not be compatible with old versions of the tools; and once you have worked on an old document with a more recent version of the tool, you may no longer be able to work on that document with the old tool. If the Lisa cannot work on a document because the tool and the document are incompatible, take the document to a Lisa that has a more recent revision of the tool. To find out the release date of a tool, display an alphabetical or chronological view of the folder in which the tool is stored.

SYSTEM PROBLEMS

INSUFFICIENT MEMORY

Insufficient room in memory usually means either that too many documents are open on the desktop or that the document you are actually working on has gotten too big.

First, put away all documents with which you currently are not working, especially if the documents were created with a different tool from the one you are using.

If the Lisa still cannot perform the task, restart the system: put away all documents, and turn the Lisa off and on again. Then open only the document you want to work on, and try the operation again.

If you are using LisaList, try changing to a larger font or shrinking the document window.

If none of these techniques works, then your document is probably too big. Split it into two smaller documents if possible.

SYSTEM RESTART

Sometimes the Lisa Office System encounters an error condition that it cannot handle. In this case, the Lisa shuts down the desktop and starts over. If possible, any open documents are suspended in their current states so that you can continue where you left off after the system started again.

If the problem recurs, either your software or your hardware may be damaged.

Try reinstalling your system software and replacing the working copies of the tools you were using when the Lisa shut down the desktop. Instructions for reinstalling system software appear in Section C, Troubleshooting, under Disk Repair in the Lisa 2 Owner's Guide. If your dealer transferred the software to your startup disk, the working copies of all tools are stored in the folder labeled Tools. A diskette containing the master copy of the tool is stored in the manual that comes with each tool.

If the problem recurs after reinstalling your system software, your system hardware may need repair.

DESKTOP STATE

When you are using the Lisa Office System, pressing a disk-release button triggers a series of storage procedures. Before ejecting the diskette, the computer records the "desktop state" of the diskette. The desktop state includes a list of all documents from that disk that are currently on the desktop, the size and location of any open windows, all changes to the documents since they were last saved, and the current selection or insertion point in each open document.

If the Lisa is unable to save the desktop state for a disk, check the Status panel of the disk to see how much space is available. If you have several open documents and not much disk space left, see Insufficient Room on Disk for suggestions for making more room on the disk. Alternatively, you can put away some of the documents by choosing **Save & Put Away** from the **File/Print** menu or by clicking twice on the document's title bar icon. This way the Lisa has less information to record on the state of the desktop.

If disk space is not the problem, you may have a faulty disk drive. See Disk Drive Problems.

During a sudden power loss or an unexpected software failure, the normal power-down and disk-release procedures described above do not occur. The disks are left in an in-between state, which requires repair. See Section C, Troubleshooting, under Disk Repair in the Lisa 2 Owner's Guide.

Usually, losing the desktop state is not a problem. Simply open the disks yourself, and then open any documents you want to work on. However, you may have lost any work you have done since last saving your documents.

DIFFICULTY PRINTING

The Lisa can have difficulty printing a document for a number of reasons, from simple mechanical problems to software failures.

First, verify that the printer is turned on and that all connections are secure. See Section C, Troubleshooting, in the Lisa 2 Owner's Guide for a checklist of possible mechanical problems.

If your system setup checks out, the Lisa may have insufficient room in memory or insufficient free space on the startup disk. See Insufficient Memory and Insufficient Room on Disk.

If none of these strategies solves the problem either the tool you were using or your system software may have failed. See Tool Failure.

APPENDIX B

OPERATING SYSTEM ERROR MESSAGES

Operating system error messages may help you find the problem, but always double-check using the usual troubleshooting procedures.

-6081	End of exec file input
-6004	Attempt to reset text file with typed-file type
-6003	Attempt to reset nontext file with text type
-1885	ProFile not present during driver initialization
-1882	ProFile not present during driver initialization
-1176	Data in the object have been altered by Scavenger
-1175	File or volume was scavenged
-1174	File was left open or volume was left mounted, and system crashed
-1173	File was last closed by the OS
-1146	Only a portion of the space requested was allocated
-1063	Attempt to mount boot volume from another Lisa or not most recent boot volume
-1060	Attempt to mount a foreign boot disk following a temporary unmount
-1059	The bad block directory of the diskette is almost full or difficult to read
-876	(from CLOSE_OBJECT) The file just closed. May be damaged or contain corrupted data because an I/O error occurred when writing a part of the file that was buffered by the file system
-696	Printer out of paper during initialization
-660	Cable disconnected during ProFile initialization
-626	Scavenger indicated data are questionable, but may be OK
-622	Parameter memory and the disk copy were both invalid
-621	Parameter memory was invalid but the disk copy was valid
-620	Parameter memory was valid but the disk copy was invalid
-413	Event channel was scavenged
-412	Event channel was left open and system crashed
-321	Data segment open when the system crashed. Data possibly invalid.
-320	Could not determine size of data segment
-150	Process was created, but a library used by program has been scavenged and altered
-149	Process was created, but the specified program file has been scavenged and altered
-125	Sepcified process is already terminating
-120	Specified process is already active
-115	Specified process is already suspended
100	Specified process does not exist
101	Specified process is a system process
110	Invalid priority specified (must be 1..225)
130	Could not open program file
131	File System error while trying to read program file
132	Invalid program file (incorrect format)
133	Could not get a stack segment for new process
134	Could not get a syslocal segment for new process
135	Could not get sysglobal space for new process

136 Could not set up communication channel for new process
138 Error accessing program file while loading
141 Error accessing a library file while loading program
142 Cannot run protected file on this machine
143 Program uses an intrinsic unit not found in the Intrinsic Library
144 Program uses an intrinsic unit whose name/type does not agree with the Intrinsic Library
145 Program uses a shared segment not found in the Intrinsic Library
146 Program uses a shared segment whose name does not agree with the Intrinsic Library
147 No space in syslocal for program file descriptor during process creation
148 No space in the shared IU data segment for the program's shared IU globals
190 No space in syslocal for program file description during List_LibFiles operation
191 Could not open program file
192 Error trying to read program file
193 Cannot read protected program file
194 Invalid program file (incorrect format)
195 Program uses a shared segment not found in the Intrinsic Library
196 Program uses a shared segment whose name does not agree with the Intrinsic Library
198 Disk I/O error trying to read the intrinsic unit directory
199 Specified library file number does not exist in the Intrinsic Library
201 No such exception name declared
202 No space left in the system data area for Declare_Excep_Hdl or Signal_Excep
203 Null name specified as exception name
302 Invalid LDSN
303 No data segment bound to the LDSN
304 Data segment already bound to the LDSN
306 Data segment too large
307 Input data segment path name is invalid
308 Data segment already exists
309 Insufficient disk space for data segment
310 An invalid size has been specified
311 Insufficient system resources
312 Unexpected File System error
313 Data segment not found
314 Invalid address passed to Info_Address
315 Insufficient memory for operation
317 Disk error while trying to swap in data segment

401 Invalid event channel name passed to Make_Event_Chn
402 No space left in system global data area for Open_Event_Chn
403 No space left in system local data area for Open_Event_Chn
404 Non-block-structured device specified in pathname
405 Catalog is full in Make_Event_Chn or Open_Event_Chn
406 No such event channel exists in Kill_Event_Chn
410 Attempt to open a local event channel to send
411 Attempt to open event channel to receive when event channel has a receiver
413 Unexpected File System error in Open_Event_Chn
416 Cannot get enough disk space for event channel in Open_Event_Chn
417 Unexpected File System error in Close_Event_Chn
420 Attempt to wait on a channel that the calling process did not open
421 Wait_Event_Chn returns empty because sender process could not complete
422 Attempt to call Wait_Event_Chn on an empty event-call channel
423 Cannot find corresponding event channel after being blocked
424 Amount of data returned while reading from event channel not of expected size
425 Event channel empty after being unblocked, Wait_Event_Chn
426 Bad request pointer error returned in Wait_Event_Chn
427 Wait_List has illegal length specified
428 Receiver unblocked because last sender closed
429 Unexpected File System error in Wait_Event_Chn
430 Attempt to send to a channel which the calling process does not have open
431 Amount of data transferred while writing to event channel not of expected size
432 Sender unblocked because receiver closed in Send_Event_Chn
433 Unexpected File System error in Send_Event_Chn
440 Unexpected File System error in Make_Event_Chn
441 Event channel already exists in Make_Event_Chn
445 Unexpected File System error in Kill_Event_Chn
450 Unexpected File System error in Flush_Event_Chn
530 Size of stack expansion request exceeds limit specified for program
531 Cannot perform explicit stack expansion due to lack of memory
532 Insufficient disk space for explicit stack expansion
600 Attempt to perform I/O operation on non I/O request
602 No more alarms available during driver initialization
605 Call to nonconfigured device driver
606 Cannot find sector on floppy diskette (disk unformatted)
608 Illegal length or disk address for transfer
609 Call to nonconfigured device driver

610 No more room in sysglobal for I/O request
613 Unpermitted direct access to spare track with sparing enabled on floppy drive
614 No disk present in drive
615 Wrong call version to floppy drive
616 Unpermitted floppy drive function
617 Checksum error on floppy diskette
618 Cannot format, or write protected, or error unclamping floppy diskette
619 No more room in sysglobal for I/O request
623 Illegal device control parameters to floppy drive
625 Scavenger indicated data are bad
630 The time passed to Delay_Time, Convert_Time, or Send_Event_Chn has invalid year
631 Illegal timeout request parameter
632 No memory available to initialize clock
634 Illegal timed event id of -1
635 Process got unblocked prematurely due to process termination
636 Timer request did not complete successfully
638 Time passed to Delay_Time or Send_Event_Chn more than 23 days from current time
639 Illegal date passed to Set_Time, or illegal date from system clock in Get_Time
640 RS-232 driver called with wrong version number
641 RS-232 read or write initiated with illegal parameter
642 Unimplemented or unsupported RS-232 driver function
646 No memory available to initialize RS-232
647 Unexpected RS-232 timer interrupt
648 Unpermitted RS-232 initialization, or disconnect detected
649 Illegal device control parameters to RS-232
652 N-port driver not initialized prior to ProFile
653 No room in sysglobal to initialize ProFile
654 Hard error status returned from drive
655 Wrong call version to ProFile
656 Unpermitted ProFile function
657 Illegal device control parameter to ProFile
658 Premature end of file when reading from driver
659 Corrupt File System header chain found in driver
660 Cable disconnected
662 Parity error while sending command or writing data to ProFile
663 Checksum error or CRC error or parity error in data read
666 Timeout
670 Bad command response from drive
671 Illegal length specified (must = 1 on input)
672 Unimplemented console driver function

673 No memory available to initialize console
674 Console driver called with wrong version number
675 Illegal device control
680 Wrong call version to serial driver
682 Unpermitted serial driver function
683 No room in sysglobal to initialize serial driver
685 Eject not allowed this device
686 No room in sysglobal to initialize n-port card driver
687 Unpermitted n-port card driver function
688 Wrong call version to n-port card driver
690 Wrong call version to parallel printer
691 Illegal parallel printer parameters
692 N-port card not initialized prior to parallel printer
693 No room in sysglobal to initialize parallel printer
694 Unimplemented parallel printer function
695 Illegal device control parameters (parallel printer)
696 Printer out of paper
698 Printer offline
699 No response from printer
700 Mismatch between loader version number and Operating System version number
701 OS exhausted its internal space during startup
702 Cannot make system process
703 Cannot kill pseudo-outer process
704 Cannot create driver
706 Cannot initialize floppy disk driver
707 Cannot initialize the File System volume
708 Hard disk mount table unreadable
709 Cannot map screen data
710 Too many slot-based devices
724 The boot tracks do not know the right File System version
725 Either damaged File System or damaged contents
726 Boot device read failed
727 The OS will not fit into the available memory
728 SYSTEM.OS is missing
729 SYSTEM.CONFIG is corrupt
730 SYSTEM.OS is corrupt
731 SYSTEM.DEBUG or SYSTEM.DEBUG2 is corrupt
732 SYSTEM.LLD is corrupt
733 Loader range error
734 Wrong driver is found. For instance, storing a diskette loader on a ProFile
735 SYSTEM.LLD is missing

736 SYSTEM.UNPACK is missing
737 Unpack of SYSTEM.OS with SYSTEM.UNPACK failed
791 Configurable driver (CD) code file not executable
792 Could not get code space for the CD
793 IO error reading CD code file
794 CD code file not found
795 CD has more than 1 segment
796 Cound not get temporary space while loading CD
801 IO Result <> 0 on I/O using the Monitor
802 Asynchronous I/O request not completed successfully
803 Bad combination of mode parameters
806 Page specified is out of range
809 Invalid arguments (page, address, offset, or count)
810 The requested page could not be read in
816 Not enough sysglobal space for File System buffers
819 Bad device number
820 No space in sysglobal for asynchronous request list
821 Already initialized I/O for this device
822 Bad device number
825 Error in parameter values (Allocate)
826 No more room to allocate pages on device
828 Error in parameter values (Deallocate)
829 Partial deallocation only (ran into unallocated region)
835 Invalid s-file number
837 Unallocated s-file or I/O error
838 Map overflow: s-file too large
839 Attempt to compact file past PEOF
840 The allocation map of this file is truncated
841 Unallocated s-file or I/O error
843 Requested exact fit, but one could not be provided
847 Requested transfer count is <= 0
848 End of file encountered
849 Invalid page or offset value in parameter list
852 Bad unit number
854 No free slots in s-list directory (too many s-files)
855 No available disk space for file hints
856 Device not mounted
857 Empty, locked, or invalid s-file
861 Relative page is beyond PEOF (bad parameter value)
864 No sysglobal space for volume bitmap
866 Wrong FS version or not a valid Lisa FS volume
867 Bad unit number
868 Bad unit number
869 Unit already mounted (mount)/no unit mounted
870 No sysglobal space for DCB or MDDF
871 Parameter not a valid s-file ID
872 No sysglobal space for s-file control block
873 Specified file is already open for private access
874 Device not mounted
875 Invalid s-file ID or s-file control block
879 Attempt to postion past LEOF
881 Attempt to read empty file

882 No space on volume for new data page of file
883 Attempt to read past LEOF
884 Not first auto-allocation, but file was empty
885 Could not update filesize hints after a write
886 No syslocal space for I/O request list
887 Catalog pointer does not indicate a catalog (bad parameter)
888 Entry not found in catalog
890 Entry by that name already exists
891 Catalog is full or is damaged
892 Illegal name for an entry
894 Entry not found, or catalog is damaged
895 Invalid entry name
896 Safety switch is on--cannot kill entry
897 Invalid bootdev value
899 Attempt to allocate a pipe
900 Invalid page count or FCB pointer argument
901 Could not satisfy allocation request
921 Pathname invalid or no such device
922 Invalid label size
926 Pathname invalid or no such device
927 nvalid label size
941 Pathname invalid or no such device
944 Object is not a file
945 File is not in the killed state
946 Pathname invalid or no such device
947 Not enough space in syslocal for File System refdb
948 Entry not found in specified catalog
949 Private access not allowed if file already open shared
950 Pipe already in use, requested access not possible or dwrite not allowed
951 File is already opened in private mode
952 Bad refnum
954 Bad refnum
955 Read access not allowed to specified object
956 Attempt to position FMARK past LEOF not allowed
957 Negative request count is illegal
958 Nonsequential access is not allowed
959 System resources exhausted
960 Error writing to pipe while an unsatisfied read was pending
961 Bad refnum
962 No WRITE or APPEND access allowed
963 Attempt to position FMARK too far past LEOF
964 Append access not allowed in absolute mode
965 Append access not allowed in relative mode
966 Internal inconsistency of FMARK and LEOF (warning)

967 Nonsequential access is not allowed
968 Bad refnum
971 Pathname invalid or no such device
972 Entry not found in specified catalog
974 Bad refnum
977 Bad refnum
978 Page count is nonpositive
979 Not a block-structured device
981 Bad refnum
982 No space has been allocated for specified file
983 Not a block-structured device
985 Bad refnum
986 No space has been allocated for specified file
987 Not a block-structured device
988 Bad refnum
989 Caller is not a reader of the pipe
990 Not a block-structured device
994 Invalid refnum
995 Not a block-structured device
999 Asynchronous read was unblocked before it was satisfied
1021 Pathname invalid or no such entry
1022 No such entry found
1023 Invalid newname, check for '-' in string
1024 New name already exists in catalog
1031 Pathname invalid or no such entry
1032 Invalid transfer count
1033 No such entry found
1041 Pathname invalid or no such entry
1042 Invalid transfer count
1043 No such entry found
1051 No device or volume by that name
1052 A volume is already mounted on device
1053 Attempt to mount temporarily unmounted boot volume just unmounted from this Lisa
1054 The bad block directory of the diskette is invalid
1061 No device or volume by that name
1062 No volume is mounted on device
1071 Not a valid or mounted volume for working directory
1091 Pathname invalid or no such entry
1092 No such entry found
1101 Invalid device name
1121 Invalid device, not mounted, or catalog is damaged
1122 (from RESET_CATALOG) There is no space available in the process' local data area to allocate the catalog scan buffer
1124 (from GET_NEXT-ENTRY) There is no space available in the process' local data area to allocate the catalog scan buffer
1128 Invalid pathname, device, or volume not mounted
1130 File is protected; cannot open due to protection violation
1131 No device or volume by that name

1132 No volume is mounted on that device
1133 No more open files in the file list of that device
1134 Cannot find space in sysglobal for open file list
1135 Cannot find the open file entry to modify
1136 Boot volume not mounted
1137 Boot volume already unmounted
1138 Caller cannot have higher priority than system processes when calling ubd
1141 Boot volume was not unmounted when calling rbd
1142 Some other volume still mounted on the boot device when calling rbd
1143 No sysglobal space for MDDF to do rbd
1144 Attempt to remount volume which is not the temporarily unmounted boot volume
1145 No sysglobal space for bit map to do rbd
1158 Track-by-track copy buffer is too small
1159 Shutdown requested while boot volume was unmounted
1160 Destination device too small for track-by-track copy
1161 Invalid final shutdown mode
1162 Power is already off
1163 Illegal command
1164 Device is not a diskette device
1165 No volume is mounted on the device
1166 A valid volume is already mounted on the device
1167 Not a block-structured device
1168 Device name is invalid
1169 Could not access device before initialization using default device parameters
1170 Could not mount volume after initialization
1171 '-' is not allowed in a volume name
1172 No space available to initialize a bitmap for the volume
1176 Cannot read from a pipe more than half of its allocated physical size
1177 Cannot cancel a read request for a pipe
1178 Process waiting for pipe data got unblocked because last pipe writer closed it
1180 Cannot write to a pipe more than half of its allocated physical size
1181 No system space left for request block for pipe
1182 Writer process to a pipe got unblocked before the request was satisfied
1183 Cannot cancel a write request for a pipe
1184 Process waiting for pipe space got unblocked because the reader closed the pipe
1186 Cannot allocate space to a pipe while it has data wrapped around
1188 Cannot compact a pipe while it has data wrapped around
1190 Attempt to access a page that is not allocated to the pipe

1191 Bad parameter
1193 Premature end of file encountered
1196 Something is still open on device--cannot unmount
1197 Volume is not formatted or cannot be read
1198 Negative request count is illegal
1199 Function or procedure is not yet implemented
1200 Illegal volume parameter
1201 Blank file parameter
1202 Error writing destination file
1203 Invalid UCSD directory
1204 File not found
1210 Boot track program not executable
1211 Boot track program too big
1212 Error reading boot track program
1213 Error writing boot track program
1214 Boot track program file not found
1215 Cannot write boot tracks on that device
1216 Could not create/close internal buffer
1217 Boot track program has too many code segments
1218 Could not find configuration information entry
1219 Could not get enough working space
1220 Premature EOF in boot track program
1221 Position out of range
1222 No device at that position
1225 Scavenger has detected an internal inconsistency symptomatic of a software bug
1226 Invalid device name
1227 Device is not block structured
1228 Illegal attempt to scavenge the boot volume
1229 Cannot read consistently from the volume
1230 Cannot write consistently to the volume
1231 Cannot allocate space (Heap segment)
1232 Cannot allocate space (Map segment)
1233 Cannot allocate space (SFDB segment)
1237 Error rebuilding the volume root directory
1240 Illegal attempt to scavenge a non-OS-formatted volume
1295 The allocation map of this file is damaged and cannot be read
1296 Bad string argument has been passed
1297 Entry name for the object is invalid (on the volume)
1298 S-list entry for the object is invalid (on the volume)
1807 No disk in floppy drive
1820 Write-protect error on floppy drive
1822 Unable to clamp floppy drive
1824 Floppy drive write error
1882 Bad response from ProFile
1885 ProFile timeout error

1998 Invalid parameter address
1999 Bad refnum
6001 Attempt to access unopened file
6002 Attempt to reopen a file which is not closed using an open FIB (file info block)
6003 Operation incompatible with access mode with which file was opened
6004 Printer offline
6005 File record type incompatible with character device (must be byte sized)
6006 Bad integer (read)
6010 Operation incompatible with file type or access mode
6081 Premature end of exec file
6082 Invalid exec (temporary) file name
6083 Attempt to set prefix with null name
6090 Attempt to move console with exec or output file open
6101 Bad real (read)
6151 Attempt to reinitalize heap already in use
6152 Bad argument to NEW (negative size)
6153 Insufficient memory for NEW request
6154 Attempt to RELEASE outside of heap

Operating System Error Codes

The error codes listed below are generated only when a nonrecoverable error occurs while in Operating System code.

10050 Request block is not chained to a PCB (Unblk_Req)
10051 Bld_Req is called with interrupts off
10100 An error was returned from SetUp_Directory or a Data Segment Routine Setup_IUInfo)
10102 Error > 0 trying to create shell (Root)
10103 Sem_Count > 1 (Init_Sem)
10104 Could not open event channel for shell (Root)
10197 Automatic stack expansion fault occurred in system code (Check_Stack)
10198 Need_Mem set for current process while scheduling is disabled SimpleScheduler)
10199 Attempt to block for reason other than I/O while scheduling is disabled (SimpleScheduler)
10201 Hardware exception occurred while in system code
10202 No space left from Sigl_Excep call in Hard_Excep
10203 No space left from Sigl_Excep call in Nmi_Excep
10205 Error from Wait_Event_Chn called in Excep_Prolog
10207 No system data space in Excep_Setup
10208 No space left from Sigl_Excep call in range error
10212 Error in Term_Def_Hdl from Enable_Excep
10213 Error in Force_Term_Excep, no space in Enq_Ex_Data

10401 Error from Close_Event_Chn in Ec_Cleanup
10582 Unable to get space in Freeze_Seg
10590 Fatal memory parity error
10593 Unable to move memory manager segment during startup
10594 Unable to swap in a segment during startup
10595 Unable to get space in Extend_MMlist
10596 Trying to alter size of segment that is not data or stack (Alt_DS_Size)
10597 Trying to allocate space to an allocated segment (Alloc_Mem)
10598 Attempting to allocate a nonfree memory region (Take_Free)
10599 Fatal Disk error trying to read system code into memory
10600 Error attempting to make timer pipe
10601 Error from Kill_Object of an existing timer pipe
10602 Error from second Make_Pipe to make timer pipe
10603 Error from Open to open timer pipe
10604 No syslocal space for head of timer list
10605 Error during allocate space for timer pipe, or interrupt from nonconfigured device
10609 Interrupt from nonconfigured device
10610 Error from info about timer pipe
10611 Spurious interrupt from floppy drive #2
10612 Spurious interrupt from floppy drive #1, or no syslocal space for timer list element
10613 Error from Read_Data of timer pipe
10614 Actual returned from Read_Data is not the same as requested from timer pipe
10615 Error from open of the receiver's event channel
10616 Error from Write_Event to the receiver's event channel
10617 Error from Close_Event_Chn on the receiver's pipe
10619 No sysglobal space for timer request block
10624 Attempt to shut down floppy disk controller while drive is still busy
10637 Not enough memory to initialize system timeout drives
10675 Spurious timeout on console driver
10699 Spurious timeout on parallel printer driver
10700 Mismatch between loader version number and Operating System version number
10701 OS exhausted its internal space during startup
10702 Cannot make system process
10703 Cannot kill pseudo-outer process
10704 Cannot create driver
10706 Cannot initialize floppy disk driver
10707 Cannot initialize the File System volume
10708 Hard disk mount table unreadable
10709 Cannot map screen data
10710 Too many slot-based devices
10724 The boot tracks do not know the right File System version
10725 Either damaged File System or damaged contents
10726 Boot device read failed
10727 The OS will not fit into the available memory
10728 SYSTEM.OS is missing
10729 SYSTEM.CONFIG is corrupt

10730 SYSTEM.OS is corrupt
10731 SYSTEM.DEBUG or SYSTEM.DEBUG2 is corrupt
10732 SYSTEM.LLD is corrupt
10733 Loader range error
10734 Wrong driver is found. For instance, storing a diskette loader on a ProFile
10735 SYSTEM.LLD is missing
10736 SYSTEM.UNPACK is missing
10737 Unpack of SYSTEM.OS with SYSTEM.UNPACK failed
11176 Found a pending write request for a pipe while in Close_Object when it is called by the last writer of the pipe
11177 Found a pending read request for a pipe while in Close_Object when it is called by the (only possible) reader of the pipe
11178 Found a pending read request for a pipe while in Read_Data from the pipe
11180 Found a pending write request for a pipe while in Write_Data to the pipe
118xx Error xx from diskette ROM (See OS errors 18xx)
11901 Call to Getspace or Relspace with a bad parameter, or free pool is bad

apple computer

LISA 2 / MACINTOSH XL

TECHNICAL PROCEDURES

Name Change

The Lisa 2/10 is now called the Macintosh XL. All references to the Lisa 2/10 contained in these procedures refer as well to those machines designated as the Macintosh XL.

LISA 2/MACINTOSH XL TECHNICAL PROCEDURES

TABLE OF CONTENTS

General Information

System Configurations.....1
Lisa 2.....1
Lisa 2/5.....2
Macintosh XL (formerly Lisa 2/10).....3
Modified Lisa 2/5 and Modified Macintosh XL.....4
Configuring Peripherals.....7
ProFile.....7
Dot Matrix Printer (DMP).....8
Daisy Wheel Printer (DWP).....9
ImageWriter Printer.....10
LaserWriter Printer.....11
Basic Troubleshooting and Diagnostics.....12
Identifying a Defective Video State ROM.....12
Error Codes.....15

Section 1 - Take-Apart

The Front Panel.....3
The Disk Drive Module.....5
The Rear Panel.....13
Expansion Cards.....15
The Card Cage and Boards.....19
The Motherboard.....21
The Power Supply.....23
The Softswitch Assembly.....24
The Disk Drive Cable Assembly.....25

Section 1A - HDA Packaging for Shipment.....1.A.1

Section 2 - See Lisa 1.0 - Section 2, Setup.

©Apple Computer, Inc., 1985, 1986, 1987.
No part of this document may be reproduced in any form without the written permission of Apple Computer, Inc.

Macintosh is a trademark of Apple Computer, Inc.
Apple, Lisa, and the Apple logo are registered trademarks of Apple Computer, Inc.

Section 3 - Video Take-Apart

Safety Precautions.....3.2
Discharging the CRT.....3.5
Removing the CRT.....3.9
Installing the CRT.....3.11
Removing the Video Board.....3.12
Replacing the Video Board.....3.12
Removing the Flyback Transformer.....3.14
Replacing the Flyback Transformer.....3.14
Removing the Disk Drive Cable Assembly.....3.15
Replacing the Disk Drive Cable Assembly.....3.15
Locating the Power-Supply-to-Card-Cage Assembly.....3.16
Removing the Macintosh XL Screen Kit Transformer.....3.17
Replacing the Macintosh XL Screen Kit Transformer.....3.18
Disposing of the Cathode-Ray Tube (CRT).....3.19

Section 4 - Video Adjustments

Introduction.....4.3
Tools and Equipment Meeded.....4.3
Accessing the Video assembly and the Test Patterns.....4.4
Summary of Video Adjustments: Problems and Corrections.....4.5
Horizontal Phase Adjustment.....4.7
Brightness and Contrast Adjustments.....4.8
Calling Up the Video Crosshatch Pattern.....4.9
Yoke Adjustment.....4.11
Height, Width, Vertical Linearity, and Centering.....4.12
Magnet Adjustments.....4.13
Finishing Up.....4.14

Section 5 - Diagnostics

Vital Information.....5.2
Interpreting the Boot ROM and I/O ROM.....5.2.1
Using Lisa/Macintosh XL Test.....5.3
Booting Lisa/Macintosh XL Test.....5.3
Customer Level.....5.4
Service Level.....5.5
Running Individual Tests.....5.6
Brief Test Descriptions.....5.7
Run System Check.....5.8
Set Diagnostic Controls.....5.8

Section 6 - Troubleshooting

How to Use This Section.....6.3
Basic Lisa 2/Macintosh XL Configuration Table.....6.4
System Boards Compatibility Table.....6.6
Primary Troubleshooting Flowchart.....6.8
Symptom/Cure Procedures and Tables
  Power Repair Procedures.....6.11
  Startup Repair and Error Tones.....6.12
  Startup Error Icons.....6.14
  Startup Error Codes.....6.16
  "Sad Macintosh" Error Codes.....6.20
  System Hang Procedures.....6.21
  Video Problems.....6.22
  MicroDisk Drive Problems.....6.28
  Hard Disk Operating Systems (Environments).....6.30
  Hard Disk Problems.....6.32
    How to Repair Crashed Disk (MacWorks).....6.32
    How to Repair a Crashed Disk (Lisa Office System)..6.33
    ProFile Symptom/Cure Table.....6.34
    Internal Hard Disk Symptom/Cure Table.....6.35
  Mouse Problems.....6.36
  Keyboard Problems.....6.37
  Noise Problems.....6.38
  Transmitting/Receiving Repair Procedure.....6.39
Appendix A: MacWorks/Lisa Office System Error Messages.....6.40
Appendix B: Operating System Error Messages.....6.48
            Operating System Error Codes.....6.58

Lisa 2/Macintosh XL Technical Procedures

General Information

Contents:

System Configurations.....1
  Lisa 2.....1
  Lisa 2/5.....2
  Macintosh XL (formerly Lisa 2/10).....3
  Modified Lisa 2/5 and Modified Macintosh XL.....4
Configuring Peripherals.....7
  ProFile.....7
  Dot Matrix Printer (DMP).....8
  Daisy Wheel Printer (DWP).....9
  ImageWriter Printer.....10
  LaserWriter Printer.....11
Basic Troubleshooting and Diagnostics.....12
  Identifying a Defective Video State ROM.....12
  Error Codes.....15

SYSTEM CONFIGURATIONS

There are five configurations of the Lisa 2/Macintosh XL system: Lisa 2, Lisa 2/5, Macintosh XL (formerly Lisa 2/10), Modified Lisa 2/5, and Modified Macintosh XL. General information about each system is listed below. Other sections of the **Lisa 2 Technical Procedures** give more specific information, and are referred to below. When you see a reference note, turn to the appropriate section in this manual and review the information given there.

Lisa 2

1. Has 512K of memory if only one memory board is installed.
2. Has maximum memory of 1 megabyte if both memory boards are installed. (However, two megabytes of memory are possible if third party memory boards are installed.)
3. All software is loaded via the microdisk drive on 3.5" diskettes.
4. Does not have internal or external hard disk.
   a) Once the ProFile (5 or 10MB) is connected, Lisa 2 becomes Lisa 2/5.
   b) Cannot install an internal hard disk because the I/O board and Motherboard do not support one.

Refer to **Section 6, Troubleshooting,** for the "Basic Lisa 2/Macintosh XL Configuration Table" and the "System Boards Compatibility Table."

Lisa Office System
- Must be loaded onto a hard disk (ProFile or internal hard disk) and therefore cannot run on a Lisa 2.

MacWorks
a) Can be loaded via the microdisk drive; must boot MacWorks disk first, then insert each application as needed.
b) In the MacWorks environment, the Lisa 2 behaves like a Macintosh without an external disk drive.

Workshop (for Software Development)
a) Two memory boards are required to run all versions of the Workshop.
b) Only versions 1.2 and 2.0 of Lisa Pascal will run without a hard disk However a hard disk is recommended for the best system performance.
c) All other versions of the Workshop require a hard disk, and therefore cannot run on a Lisa 2.

Lisa 2/5

1. This is a Lisa 2 with a 5 or 10 megabyte ProFile (external hard disk) connected to the built-in parallel port in back of the Lisa 2.
2. Additional ProFiles (up to 6) may be added by connecting them to optional parallel interface cards.
3. Software may be booted from the microdisk drive or from the ProFile(s).
4. Does not have an internal hard disk.
   - An internal hard disk cannot be installed because the I/O board and Motherboard do not support one.

Refer to **Section 6, Troubleshooting,** for the "Basic Lisa 2/Macintosh XL Configuration Table" and the "System Boards Compatibility Table."

Lisa Office System

ALL VERSIONS OF THE LISA OFFICE SYSTEM SHOULD BE UPGRADED TO VERSION 3.1

a) Must be installed onto the ProFile. After the installation you do not have to boot any diskettes. Just turn the system on and the Office System comes up.
b) All applications can be installed onto the ProFile.
   1) Applications are serialized (licensed to be used only on one Lisa) once they have been installed onto the ProFile.
   2) If the ProFile is transferred to a different Lisa, the Office System will come up, but you will not be able to open applications.
c) The Office System and tools take up approximately 2.5 Megabytes of ProFile memory.
d) ProFile may run Lisa Office System and Workshop only, or can share Lisa and MacWorks operating systems.

MacWorks

ALL VERSIONS OF MACWORKS XL SHOULD BE UPGRADED TO THE LATEST VERSION (CURRENTLY VERSION 3.0).

a) This environment can be installed onto the ProFile.
b) Most MacWorks applications can be also be installed onto the ProFile.
c) ProFile may run MacWorks only, or can share MacWorks and Lisa Office System operating systems. In this case, the booting process is different for each environment. (See **MacWorks Owner's Manual.**)
d) MacWorks supports the built-in parallel port only.

Workshop (for Software Development)

a) Two memory boards are required to run all versions of the Workshop.
b) Is compatible with the Lisa Office System and can be loaded onto the same ProFile
c) Pascal is available

Refer to **Section 6, Troubleshooting** for "Hard Disk Operating Systems."

Macintosh XL (formerly Lisa 2/10)

Lisa 2/10 was renamed Macintosh XL in January, 1985. The purpose was to make it clear that the Macintosh XL (using MacWorks) and the Macintosh are compatible."

1. Has a 10 megabyte internal hard disk.
2. Up to six ProFiles can be added by connecting them to optional parallel interface cards.
3. Software may be booted from the internal hard disk, the ProFile(s) (if connected), or the microdisk drive.
4. The I/O board and motherboard are different from those in the Lisa 2.

Refer to **Section 6, Troubleshooting,** for the "Basic Lisa 2/Macintosh XL Configuration Table", and the "System Boards Compatibility Table."

Lisa Office System

ALL VERSIONS OF THE LISA OFFICE SYSTEM SHOULD BE UPGRADED TO VERSION 3.1

a) Must be installed onto the internal hard disk. You do not have to boot any diskettes. Just turn the system on and the Office System comes up.
b) All applications can be installed onto the internal hard disk.
    1) Applications, except LisaWrite and LisaProject 3.1, are serialized (licensed to be used only on one Lisa) once they have been installed onto to ProFile.
    2) If the internal hard disk is transferred to a different system, the Office System will come up, but you will not be able to open applications.
c) The Office System and tools take up approximately 2.5 Megabytes of memory.
d) The internal hard disk may run Lisa Office System only, or can share Lisa and MacWorks operating systems.

MacWorks

ALL VERSIONS OF MACWORKS SHOULD BE UPGRADED TO THE LATEST VERSION (CURRENTLY VERSION 3.0).

a) This environment can be installed onto the internal hard disk.
b) Most MacWorks applications can be also be installed onto the internal hard disk.
c) The internal hard disk may run MacWorks only, or can share MacWorks and Lisa Office System operating systems. In this case, the booting process is different for each environment.
d) MacWorks supports the internal hard disk only.

Workshop (for Software Development)

a) Two memory boards are required to run all versions of the Workshop.
b) Is compatible with the Lisa Office System and can be loaded onto the same internal hard disk.
c) Pascal is available

Refer to **Section 6, Troubleshooting,** for "Hard Disk Operating Systems."

Modified Lisa 2/5 and Modified Macintosh XL

Because Macintosh pixels are square and Lisa pixels are rectangular, Macintosh documents will appear to be slightly taller than their actual size when displayed on a Lisa. However, when you print a Macintosh document using a Lisa, the printout will look exactly the way the document would be displayed on a Macintosh (not a Lisa) screen.

1. Modified Lisa 2/5 and Modified Macintosh XL have the same features as the unmodified systems except for three CPU board ROM chips.

2. Additional transformer is installed between the CRT and the video board.

Refer to **Section 6, Troubleshooting,** for the "Basic Lisa 2/Macintosh XL Configuration Table" and the "System Boards Compatibility Table."

Refer to "Installing the Kit" in **Section 4, Macintosh XL Screen Modification Kit** under the tab **Upgrade and Retrofit,** for installation instructions.

Lisa Office System

- Cannot run on a modified Lisa 2/Macintosh XL.

MacWorks

ALL VERSIONS OF MACWORKS SHOULD BE UPGRADED TO THE LATEST VERSION (CURRENTLY VERSION 3.0).

a) This environment can be installed onto the internal hard disk.
b) Just turn on the system to boot MacWorks from hard disk drive.
c) Most MacWorks applications can be also be installed onto the internal hard disk.
d) The internal hard disk runs MacWorks only.

Workshop (for programming)

- Cannot run on a modified Lisa 2/Macintosh XL.

Refer to **Section 6, Troubleshooting**, for the "Basic Lisa 2/Macintosh XL Configuration Table."

CONFIGURING PERIPHERALS

To use a peripheral device, an operating system (Lisa Office System or MacWorks) must know to which port the device is connected, how to communicate with it, and how to operate it.

Hardware and software configuration information is given for each peripheral listed below.

ProFile

1. Connects directly to the built-in parallel port for Lisa 2 or 2/5.

2. Connects via parallel interface card for Macintosh XL as shown below.

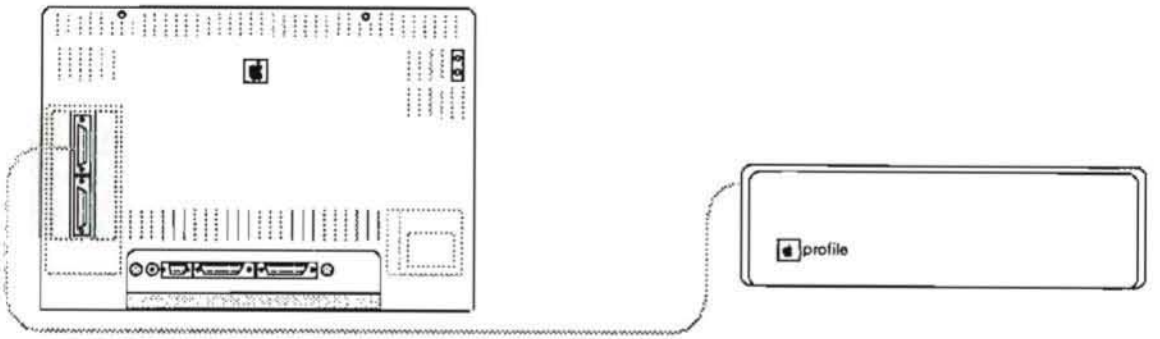

If there is more than one hard disk attached, follow the procedures below to select which disk you want to start up from.

1. Turn the system on. After you hear the first "click", press the **<SPACE BAR>**.

2. After the system performs its self-diagnostic test, the **STARTUP FROM** menu will appear at the upper left corner of the screen. Use the mouse to select the startup device.

   Lisa Office System
   Boot the Office System Environment and set **Preferences**. (Refer to **Lisa Office System Manual,** "Setting Preferences.")

   MacWorks
   MacWorks can be installed only if the ProFile is attached to the built-in parallel port.

Dot Matrix Printer (DMP)

1. For Lisa 2 (without ProFile), connect to the built-in parallel port.

2. For all other systems, connect via the parallel interface card as shown below.

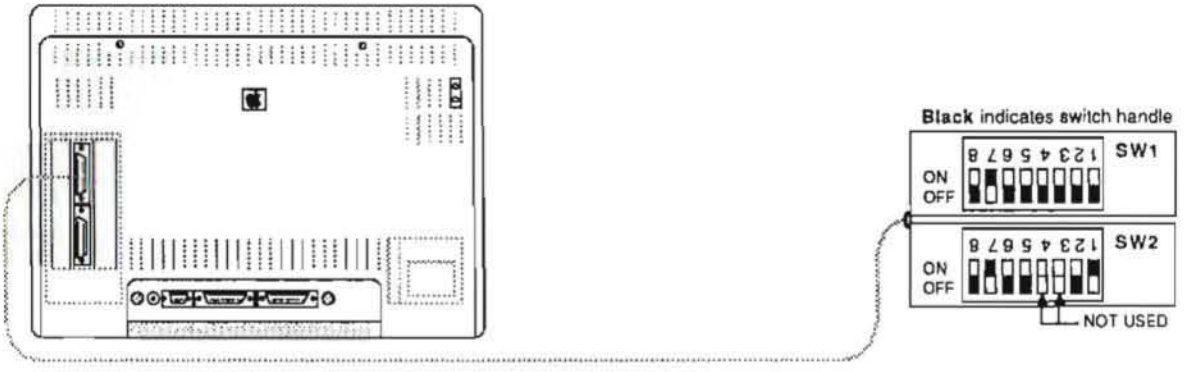

DOT MATRIX PRINTER

Lisa Office System

Boot the Office System Environment and set **Preferences.** (Refer to **Lisa Office System Manual,** "Setting Preferences.")

MacWorks

Must install parallel printer driver.

a) Boot the MacWorks Environment.
b) Insert the MacWorks System Disk and select the **Parallel Printer Install** icon. The install program will guide you through the procedure.

Daisy Wheel Printer (DWP)

- Connect directly to one of the serial ports at the back of the system as shown below.

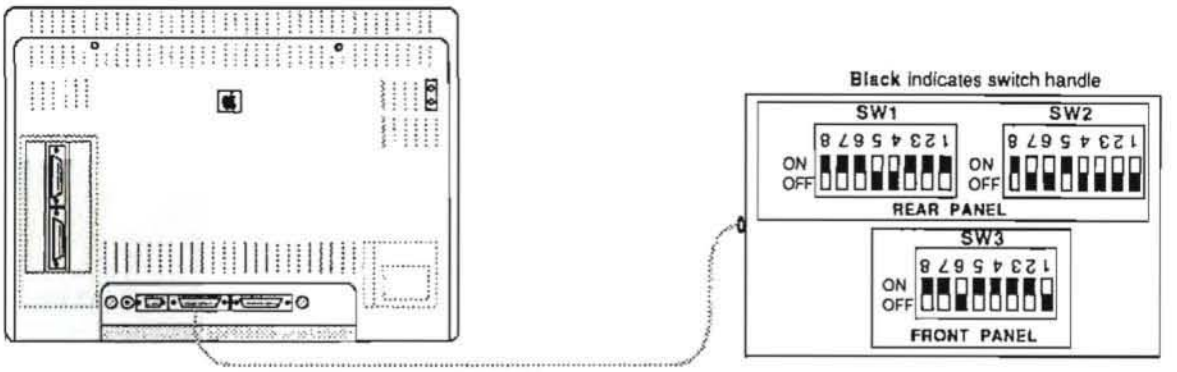

DAISY WHEEL PRINTER

Lisa Office System

Boot the Office System Environment and set **Preferences.** (Refer to **Lisa Office System Manual,** "Setting Preferences.")

MacWorks

There is no current software driver sold by Apple that runs the Daisy Wheel Printer using MacWorks. However, there are several third party vendors who market driver software to run any letter quality printer using MacWorks.

ImageWriter Printer

- Connect directly to one of the serial ports at the back of the system as shown below.

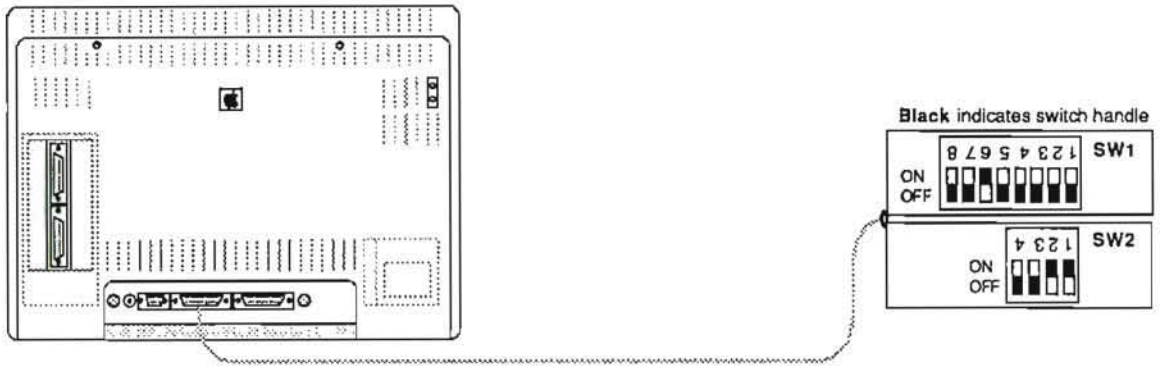

IMAGEWRITER (Serial)

Lisa Office System

Boot the Office System Environment and set **Preferences.** (Refer to **Lisa Office System Manual,** "Setting Preferences.")

MacWorks

ImageWriter driver is on the MacWorks System Disk. It is transferred to the hard disk when the System Folder is copied onto the hard disk.

LaserWriter Printer

- Connect to serial port B via AppleTalk connector boxes as shown below

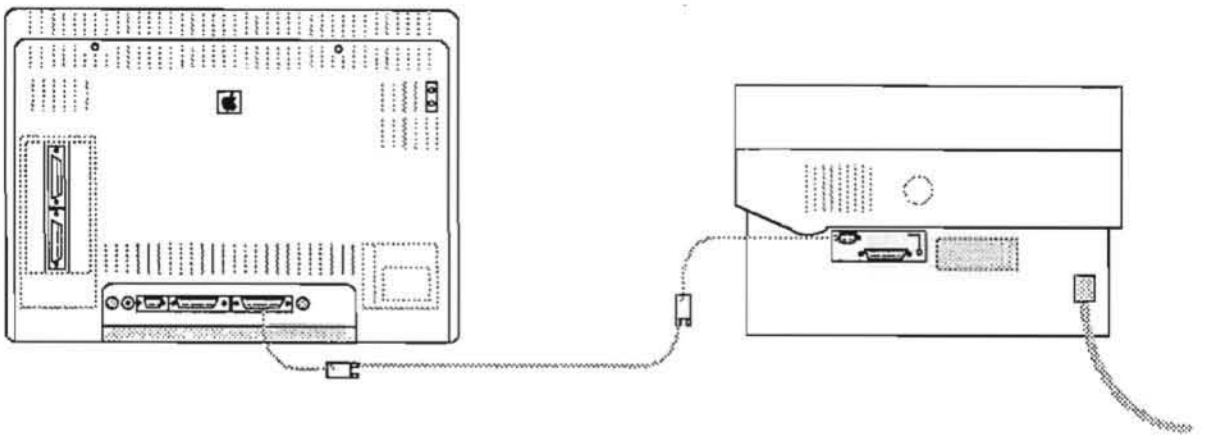

Lisa Office System
Does not support LaserWriter.

MacWorks
Must install LaserWriter driver onto the MacWorks hard disk. Driver installation diskette comes with the LaserWriter package.

LISA 2/MACINTOSH XL BASIC TROUBLESHOOTING AND DIAGNOSTICS

Before you can use the diagnostic diskette to analyze the system, the system must be able to boot the diagnostic diskette. The video circuit must be functioning well enough that you can see the diagnostic menus on the screen.

To get the system up and running well enough to boot a diagnostic diskette, follow the steps in the "Primary Troubleshooting Flowchart" in **Section 6, Troubleshooting.**

When you've finished the flowchart procedures, go to **Section 5,** "Using the Diagnostic Diskette," for instructions on running the diagnostics.

Identifying a Defective Video State ROM

The Lisa 2/Macintosh XL Video State ROM is a multipurpose chip on the CPU board at location 6-C. It contains the serial number and AppleNet number of the system in which it is installed. One of the Video State ROM functions is to serialize Lisa Office System applications to the particular system on which they are installed. This serialization process does not occur when installing applications in the MacWorks environment. The Video State ROM is also involved with the video display and memory allocation.

Whenever the CPU board is replaced, you must be sure to install the customer's Video State ROM on the replacement CPU board.

CONTINUED ON THE NEXT PAGE

The following symptoms can be caused by a defective or incorrect Video State ROM. The most likely cause and a solution is provided below each symptom described.

Symptom

When trying to open a Lisa Office System application, a message comes up saying that the application tool is not licensed for use on the system.

Probable Causes

a) The CPU board has been replaced with the wrong Video State ROM installed.

b) The software has previously been installed on a different system.

Solution

a) Remove the Video State ROM from the customer's original CPU board and install it in the new board. If this is not possible, record the serial number and the AppleNet of the system. Call your TAC and order a replacement ROM.

b) If the customer tried to install the Lisa Office System applications on a second system, tell them that they will have to buy a second set of software.

Symptom

When trying to open **Preferences** in the Lisa Office System environment, a message is displayed saying that the system is having difficulties displaying **Preferences.**

Probable Cause

The Video State ROM is defective or the wrong ROM has been installed.

Solution

a) Install the customer's original Video State ROM.

b) Install another CPU board with a different Video State ROM. Reinstall the Lisa Office System onto the hard disk. Once the installation is complete, insert the Office System 1 diskette and select **Repair** from the first menu. When the repair process is complete, turn the system off and back on again. Try opening **Preferences.** If **Preferences** is displayed, turn the system off, replace the

customer's original Video State ROM, and try opening **Preferences** again. If **Preferences** still cannot be displayed, record the system serial number and the AppleNet number, then call your TAC to order a new ROM.

Symptom

No video or incorrect video.

Probable Cause

The Video State ROM is bad, or there is no ROM installed.

Solution

a) Verify that the Video State ROM is installed on the CPU board. If not, install the customer's original ROM.

b) Put in a new CPU board with a different Video State ROM installed. If the system works, the original ROM was bad. Record the system serial number and AppleNet number, then call your TAC to order a new ROM. Install the new ROM before returning the system to the customer.

Error Codes

The Lisa 2/Macintosh XL may display some type of error code/tone when the system fails during operation. Error codes are listed in **Section 6, Troubleshooting.** The different types of error codes are listed and defined below. Review them so that when they come up, you will know what kind of error code you are dealing with.

Startup Error Icons

When the system fails during its initial self-test or while booting something, an icon representing the bad component is displayed with an "X" through it.

Startup Error Codes

A number is displayed while booting software.

Startup Error Tones

A combination of two or three "Low/High" tones is emitted during the initial self-test or while trying to boot software.

"Sad Macintosh" Error Codes

These occur only on systems using MacWorks. A "Sad Macintosh" Icon appears just when you would expect the Macintosh desktop to appear on the screen.

Operating System Error Codes

These numbers are displayed when there is an error while using an application. Usually they represent a software error.

apple computer

Lisa 2 Technical Procedures

Section 1

Take-Apart

Contents:

The Front Panel
Removing the Front Panel.....3
Replacing the Front Panel.....3

The Disk Drive Module
Removing the Disk Drive Module.....5
**Installing the Disk Drive Module.....7
*Removing the HDA.....8
**Removing the Micro Disk Drive.....9
*Installing the HDA.....10
**Installing the New Micro Disk Drive.....11
*Removing the Fan.....12
*Installing a New Fan.....12

The Rear Panel
Removing the Rear Panel.....13
Replacing the Rear Panel.....13

Expansion Cards
Installing Expansion Cards.....15
Removing Expansion Cards.....17

The Card Cage and Boards
Removing the Card Cage.....19
Removing Boards.....19
Installing Boards.....20
Replacing the Card Cage.....20

* These procedures apply to Lisa 2/10 only
** These procedures apply to Lisa 2 and Lisa 2/10

NOTE: Procedures not marked with an asterisk apply to Lisa 1.0 and all versions of Lisa 2.

Contents (continued).

The Motherboard
Removing the Motherboard.....21
Installing a New Motherboard.....21

The Power Supply
Removing the Power Supply.....23
Replacing the Power Supply.....23

The Softswitch Assembly
Removing the Softswitch Assembly.....24
Installing a New Softswitch Assembly.....24

The Disk Drive Cable Assembly (Lisa 2 and Lisa 2/10 only)
** Removing the Disk Drive Cable Assembly.....25
** Installing the Disk Drive Cable Assembly.....26

For the procedures not listed, refer to the Lisa 1.0 Technical Procedures.

** These procedures apply to Lisa 2 and Lisa 2/10

NOTE: Procedures not marked with an asterisk apply to Lisa 1.0 and all versions of Lisa 2.

REMOVING AND INSTALLING THE FRONT PANEL

Removing the Front Panel

1. Turn off the Lisa by pressing the on-off button (see Figure 1). Wait until the light inside the on-off button is out.

2. Turn off all peripheral devices. Unplug the Lisa and all peripherals from the wall outlet.

3. Place one finger on each of the two dished pads beneath the front panel (see Figure 2).

4. Push the pads up and pull the bottom of the panel forward and down.

Replacing the Front Panel

1. Hold the panel with one finger on each dished pad along the bottom edge.

2. Insert the upper edge of the panel behind the lip of the top housing on the Lisa.

3. Pressing the dished pads up, push the bottom edge of the panel against the Lisa until the panel snaps into place.

FIGURE 1

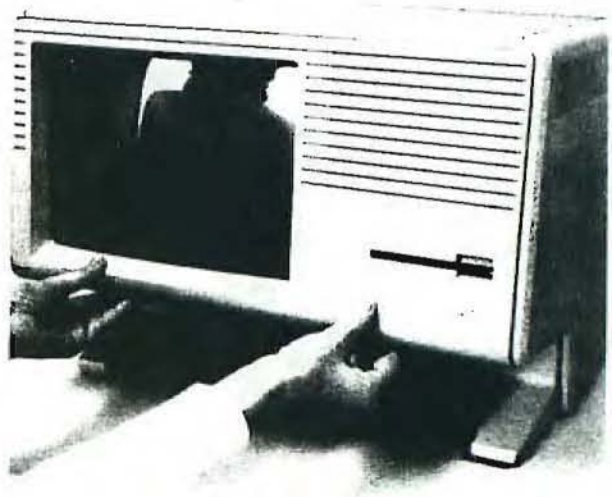

FIGURE 2

FIGURE 3

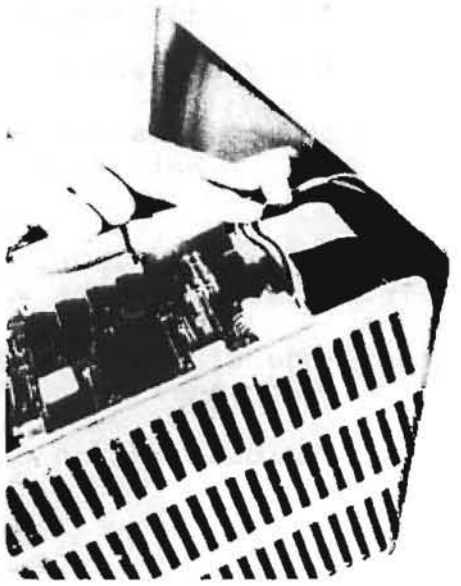

FIGURE 4

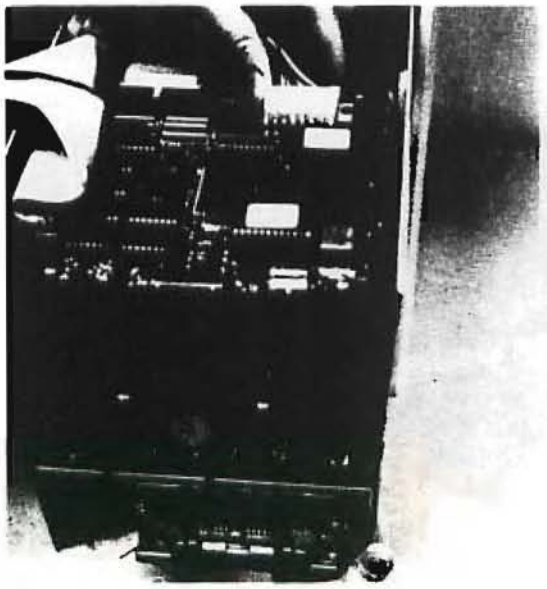

FIGURE 5

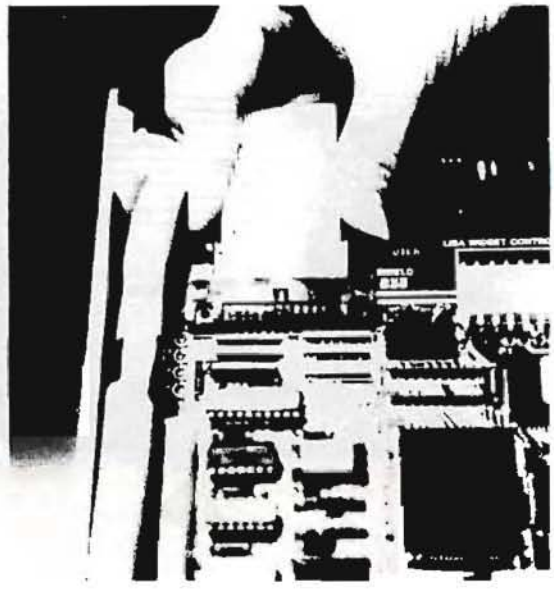

FIGURE 6

REMOVING AND INSTALLING THE DISK DRIVE MODULE

Removing the Disk Drive Module

1. Power down. Turn off and disconnect all peripherals from the Lisa.

2. Remove the front cover.

3. Loosen the thumbscrew at the base of the disk drive carrier by turning it counterclockwise. (See Figure 3.)

   This screw loosens but does not come free from the carrier. When it's loose, you can feel the pressure of the spring at the base of the screw, and the screw can be pulled slightly in and out.

4. Grasp the thumbscrew and slowly pull the disk drive module out until you can see the cable connectors at the back edge of the uppermost PC board.

   LISA 1.0: Place the module face down and disconnect the cable connectors from both drives (pull the ejection tabs apart). Disregard the following procedures.

   LISA 2: Go to step 10.

   LISA 2/10: Continue with step 5.

5. Locate the plastic cable clamp glued to the inner left wall of the carrier, just behind the uppermost PC board.

6. While supporting the bottom of the carrier with one hand, pry open the plastic cable clamp and remove the power cable (see Figure 4).

7. Locate the plastic power connector at the right side of the uppermost PC board (see Figure 5). Gently work it out of its socket.

8. Identify the HDA connector located at the left of the power connector. It has ejection latches on either side of the connector. (See Figure 6.)

9. Pull the latches apart to eject the cable connector from its socket.

10. Carefully rotate the disk drive module downward until you can see the micro disk drive connector (mounted on the back of the carrier, next to the fan). Disconnect the micro disk drive connector.

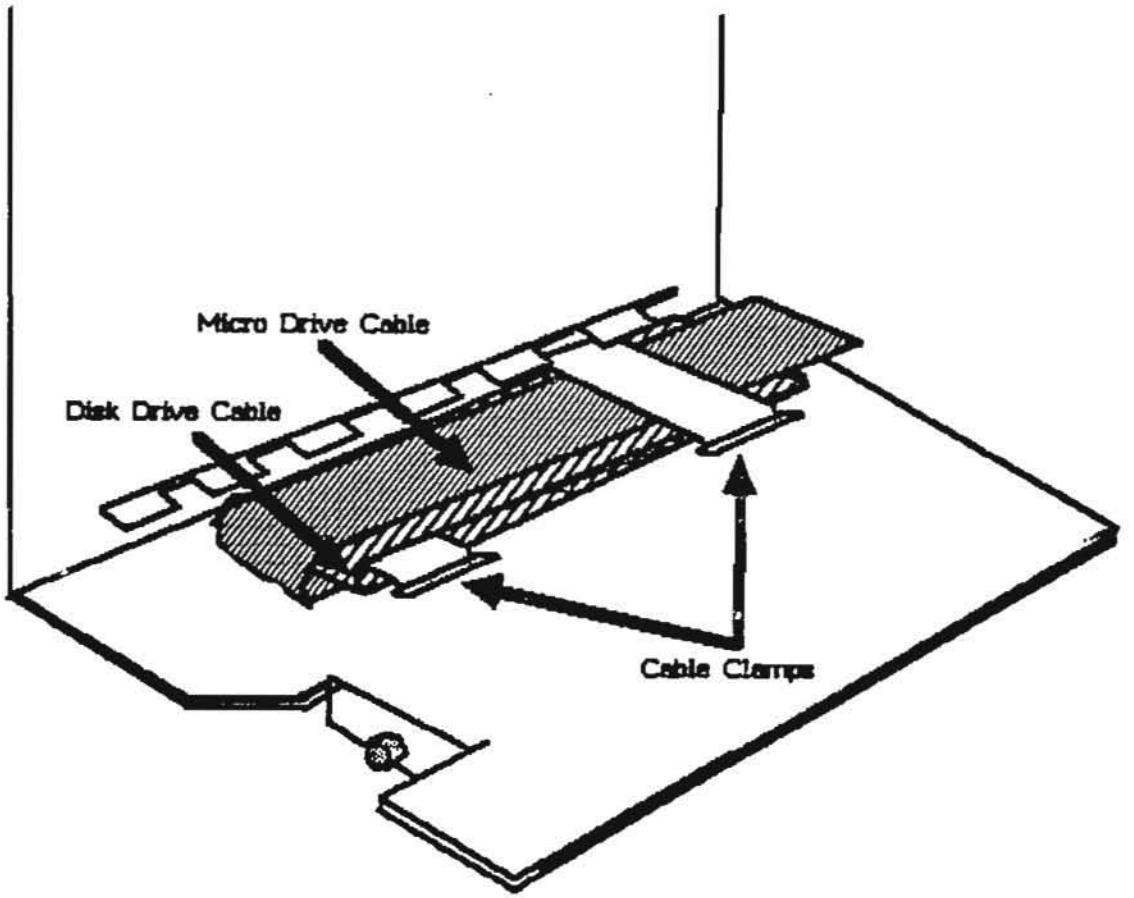

FIGURE 7

Installing the Disk Drive Module (Lisa 2 and 2/10)

1. Make sure that the disk drive (ribbon) cables are routed through both cable clamps as shown in Figure 7.

2. Set the Disk Drive Module face down in front of the Lisa 2 disk drive compartment.

3. Rotate the disk drive module about 1/4 of the way into the drive chamber of the Lisa.

4. Connect the shortest ribbon cable inside the Lisa to the micro disk drive connector (mounted on the back of carrier, next to the fan).

   LISA 2: Slide the disk drive module all the way into its compartment and secure it by tightening the thumbscrew. Disregard the following procedures

5. Rotate the module about a third of the way into its compartment and place the longer of the cable connectors into the latched (HDA) connector socket. Push in firmly on the cable connector until the ejection latches snap into place.

6. Tuck the power cable under the cable clamp located on the left inner wall of the carrier.

7. Connect the nylon power connector to its socket located at the right of the latched (HDA) connector.

8. Fold down the ribbon cable on the top left side as you slide the disk drive module all the way into its compartment.

9. Secure the module by pushing in on the thumbscrew at the base of the carrier and turning it clockwise until it is snug.

Removing the HDA (Lisa 2/10)

1. Remove the disk drive module.

2. Disconnect the two-pin fan connector (see Figure 8) located on the right side of the controller card (upper board).

3. Turn the carrier over on its vented side. Remove the three screws from the solid side.

4. Set the carrier on its solid side with the front (mouth of micro drive) facing you. Remove the three Phillips screws on the vented side.

5. Locate the fan wire cable clamp (see Figure 9) on the vented wall of the carrier, just above the power connector.

6. Carefully pry open the clamp and remove the fan wire. Then gently lift up on the vented wall and move the fan wire back and completely out of the way.

7. With one hand, gently lift up on the vented wall of the carrier and carefully slide the HDA out toward the front of the carrier.

8. Set the HDA on a foam pad.

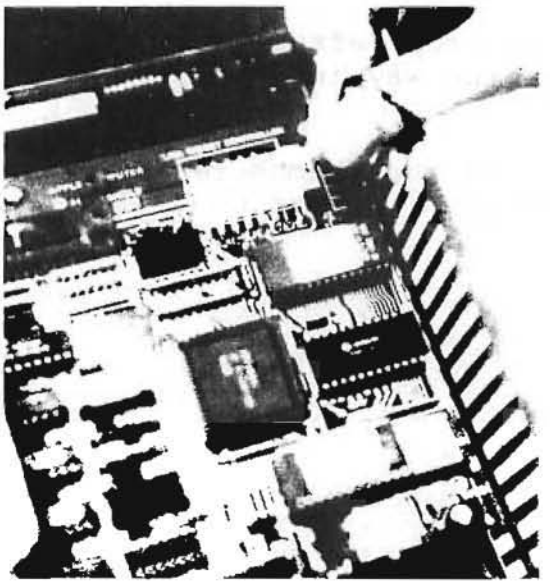

FIGURE 8

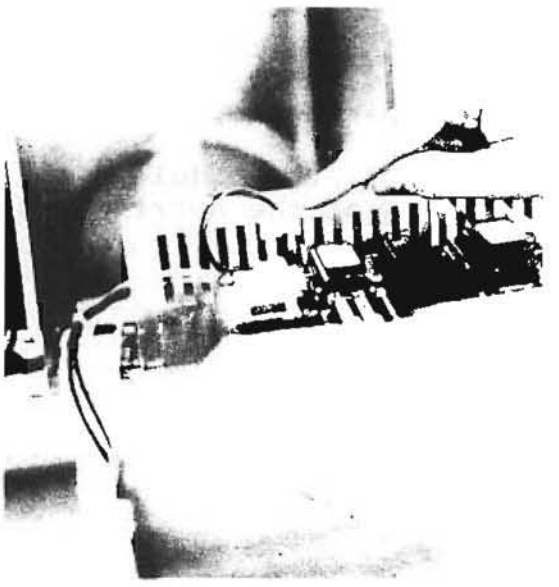

FIGURE 9

Removing the Micro Disk Drive (Lisa 2 and Lisa 2/10)

CAUTION: ALWAYS REMOVE THE HDA MODULE BEFORE REMOVING THE MICRO DISK DRIVE TO PREVENT DAMAGE TO THE HDA MOTOR ASSEMBLY.

1. Remove the HDA.

2. Turn the carrier on its solid side with the front (mouth of micro disk drive) facing you.

3. While supporting the micro drive with one hand, remove the four mounting screws located at the bottom of the carrier. When the last mounting screw has been removed, gently rest the micro disk drive against the lower wall of the carrier. Do not remove the micro disk drive from the carrier yet.

4. Disconnect the ribbon cable connector (see Figure 10) from the back of the micro disk drive (not from back of carrier).

FIGURE 10

Installing the HDA (Lisa 2/10)

1. Remove the HDA from the carrier.

2. Install the customer's micro disk drive.

3. Pry open the fan wire cable clamp and move the fan wire back and completely out of the way.

4. Place the carrier on its vented side and orient it so that the top (open side) of the carrier is facing you. (See Figure 11B.)

5. Set the HDA down to the left of the carrier. Orient it so that the uppermost PC board is facing you and the ribbon cable is at the top. (See Figure 11A.)

6. Fold the ribbon cable (see Figure 7A, #1) over the PC board. Slide the HDA straight into the carrier from left to right. Make sure that the ribbon cable does not get caught between the HDA and the wall of the carrier.

   NOTE: At this point, the rounded side of the HDA should be on the same side as the mouth of the micro disk drive.

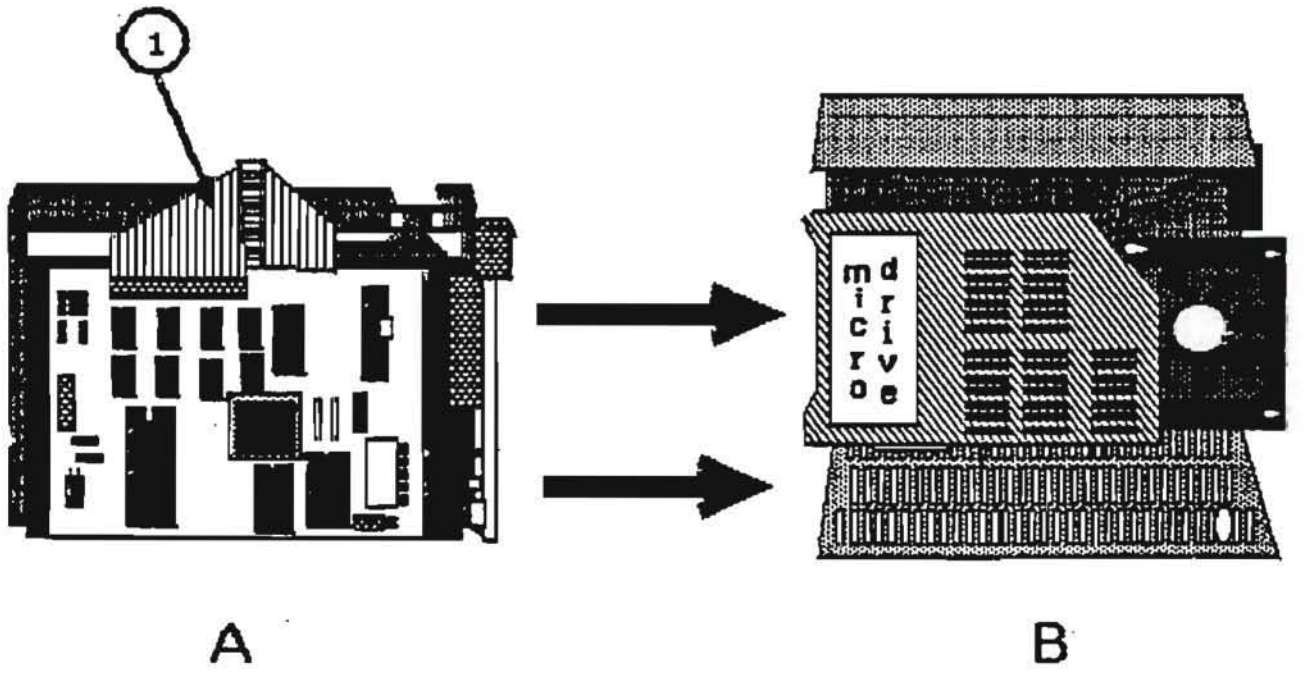

FIGURE 11

7. Line up the three holes on the side of the base plate with those on the carrier wall. Tighten the three mounting screws.

8. Place the carrier on its solid side.

9. Gently pull up on the vented wall of the carrier and place the fan wire in the base plate notch, just next to the screw hole above the fan.

10. Tuck the fan wire back under the cable clamp on the vented wall of the carrier and reconnect the two-pin fan connector.

11. Grasp the fan wire closest to the fan and carefully pull it down, tucking any excess fan wire between the fan and the vented wall of the carrier.

12. Tighten the three mounting screws on the vented side of the carrier.

    CAUTION: BE SURE THAT THE FAN WIRE REMAINS IN THE BASE PLATE NOTCH TO AVOID DAMAGING THE WIRE.

13. Tuck the ribbon cable between the HDA and the solid wall of the carrier.

Installing the New Micro Disk Drive (Lisa 2 and Lisa 2/10)

1. Remove the HDA.

2. Place the micro disk drive inside the carrier.

3. Reconnect the ribbon cable connector to the 20-pin socket on the back of the micro disk drive.

4. While supporting the micro disk drive with one hand, turn the carrier on its solid side. Align the spacer (leg) holes with the carrier screw holes and tighten the four mounting screws.

Removing the Fan (Lisa 2/10)

1. Remove the HDA.
2. Remove the micro disk drive.
3. Turn the carrier so that the back is facing you and lay it on its solid side.
4. Remove the three screws (see Figure 12, #1) that attach the fan to the carrier.
5. Set the fan aside.

Installing a New Fan (Lisa 2/10)

1. Place the fan back over the proper carrier screw holes and orient it so that the fan wire (see Figure 12, #2) comes out against the vented wall of the carrier.
2. Replace and tighten the three fan mounting screws.

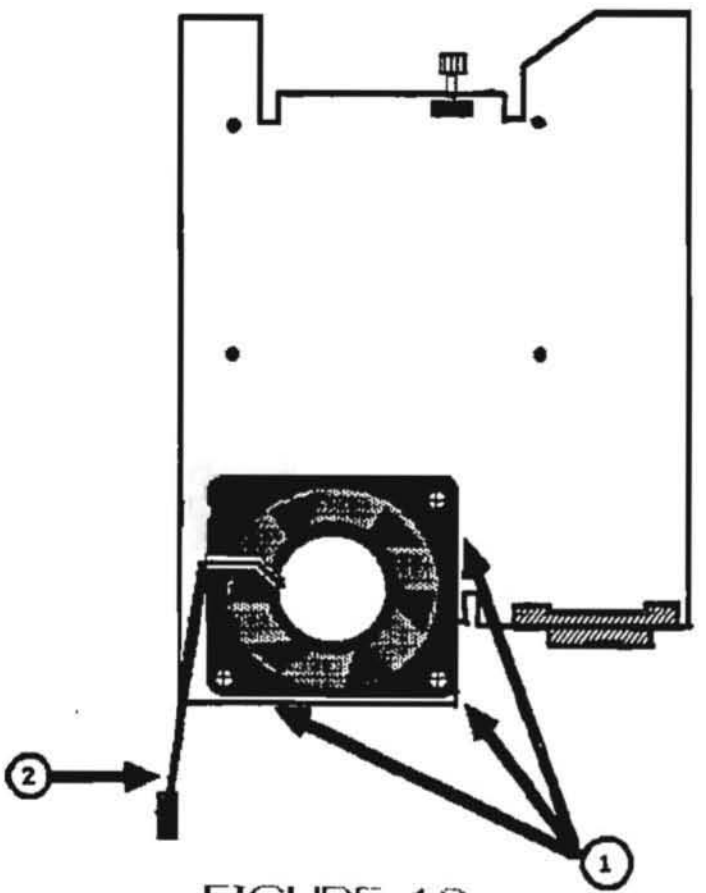

FIGURE 12

REMOVING AND REPLACING THE REAR PANEL

Removing the Rear Panel

1. Turn the two thumbscrews (see Figure 13, #1) along the upper edge of the rear panel counterclockwise until they won't turn any further.

   These screws loosen but do not come free from the rear panel.

2. Pull the panel up and toward you.

Replacing the Rear Panel

1. Make sure that the metal prongs attached to the two screws are pointed to the left.

2. Insert the tabs along the lower edge of the back panel into the slots at the base of the Lisa.

3. Push the panel flat against the back of the Lisa. If you encounter resistance, check to make sure that the power supply is pushed as far into the Lisa as it will go.

4. Turn the two thumbscrews clockwise until they are snug.

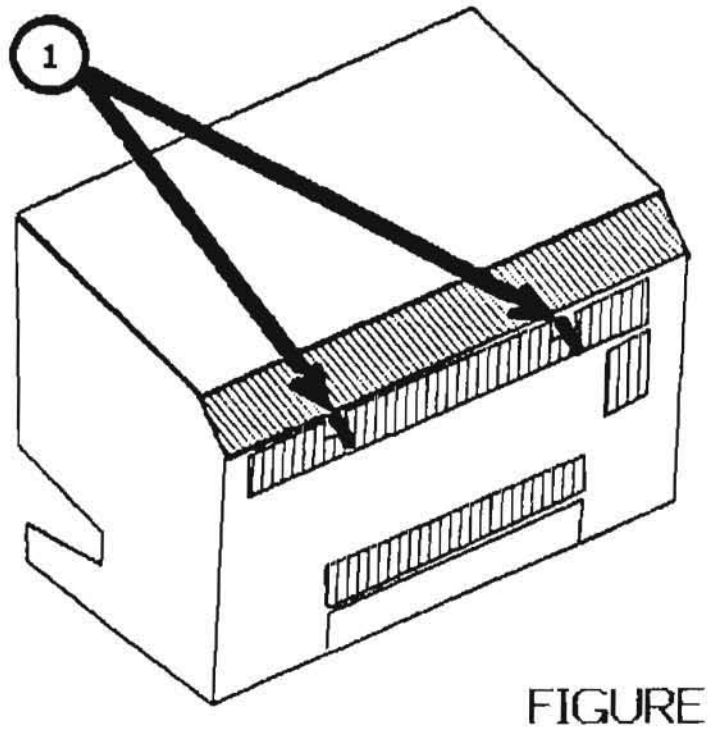

FIGURE 13

FIGURE 14

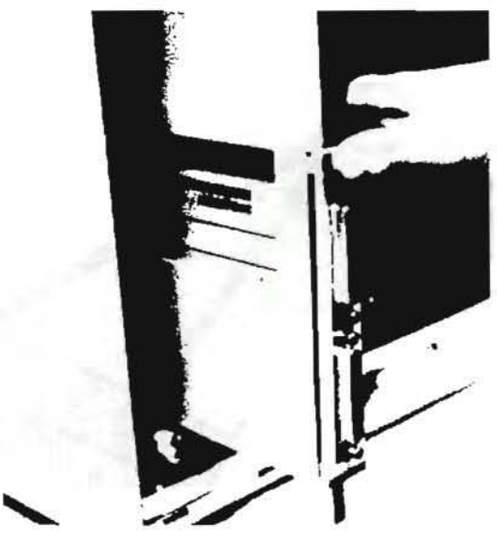

FIGURE 15

INSTALLING AND REMOVING EXPANSION CARDS

Installing Expansion Cards

1. Remove the rear panel.

2. Determine which of the three expansion slots (on the lower lift of the card cage) will hold the card.

3. Pull out the metal lever extending from the plastic cap at the bottom of the card slot. (See Figure 14.)

4. Turn the lever clockwise 90 degrees, to the 3 o'clock position.

5. Hold the expansion card by the metal edge, with the green plastic facing right and the white cover facing left. Insert the bottom of the card into the connector slot and the top of the card into the plastic slot above the connector. Slide the card into the cage as far as it will go. (See Figure 15.)

6. Turn the metal lever counterclockwise 90 degrees, back to the 12 o'clock position.

7. Push the lever back into the plastic cap.

8. A set of slot covers on Lisa's back panel blocks the electromagnetic emissions from inside Lisa. If you have just installed a card into a slot that did not previously contain a card, follow steps a through e for removing the cover that protects that slot.

   a. On the back panel, locate the slot cover for the card you have just installed.

   b. Loosen the screw at the top of the metal plate.

   c. Pull the plate over the head and out from behind the retaining notch.

   d. Loosen one of the three screws in the middle of the back panel.

   e. Slide the metal plate behind the retaining tab and over the screw head, and tighten both screws.

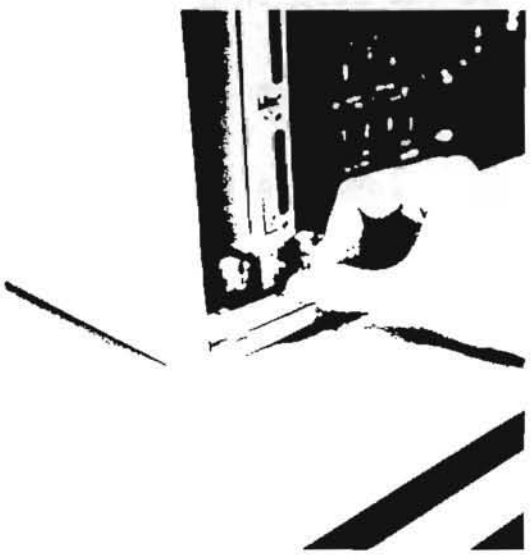

FIGURE 16

Removing Expansion Cards

1. Turn off the Lisa and disconnect the AC cord.

2. Remove the rear panel.

3. Pull out the metal lever extending from the plastic cap at the bottom of the card you want to remove. (See Figure 16.)

4. Turn the lever clockwise 90 degrees, to the 3 o'clock position.

5. Holding the card by the metal edge, pull it straight out of the slot.

6. The slot covers are designed to block the electromagnetic field generated by Lisa. Each expansion slot should be covered either by an expansion card or by one of the slot covers. If you do not intend to install an expansion card in the slot from which you remove one, then follow steps a through e.

   a. Locate the slot cover, stored on the inside rear panel.

   b. Loosen the screw just enough to let the metal plate slide over the screw head and out of the restraining notch. Remove the cover and retighten the screw.

   c. Locate and loosen the screw over the opening in the rear panel where your expansion card used to be.

   d. Slide the metal plate into the restraining notch and over the screw head.

   e. Tighten the screw to secure the slot cover.

FIGURE 17

FIGURE 18

REMOVING AND INSTALLING THE CARD CAGE AND BOARDS

Removing the Card Cage

1. Remove the rear panel.

2. Brace your thumbs against the lower edge of Lisa and pull hard on the bar that runs just above the row of connectors along the bottom of the card cage. (See Figure 17.)

   CAUTION: Be careful not to put any pressure on the small components just behind the bar.

3. Pull the cage straight out and set it aside.

Removing Boards

1. Remove the rear panel.

2. Remove the card cage.

3. Identify the board to be removed.

   NOTE: The colored levers on the upper left side of the boards match the colored pointers imprinted on the cage next to the board levers.

   a. The CPU board has a brown lever on the right and a blue lever on the left.

   b. The I/O board has a brown lever on the right and a red lever on the left.

   c. The memory boards have brown levers on the right and yellow levers on the left.

   NOTE: Handle the boards by the levers and plastic edges only.

4. Place one thumb on either lever and simultaneously flip up the colored locking levers at the top of the board; then pull the board up and out of its slot. (See Figure 18.)

   CAUTION: If you are servicing a memory board and there is an expansion card in slot 3, be careful not to scrape the yellow lever against the expansion card. If you have trouble handling the levers in the tight space, remove the expansion card before servicing the memory boards.

5. Place the board carefully on a flat surface.

IMPORTANT! IF YOU ARE SERVICING A CPU BOARD, READ PAGE 1.8 OF THE LISA 1.0 TECHNICAL PROCEDURE FOR INFORMATION ON TRANSFERRING THE VIDEO STATE MACHINE ROM!

Installing Boards

1. Identify the slot into which the board will be inserted. All boards are installed with brown locking levers on the right.

   If you have only one memory board, install it in the slot labeled MEM 1.

2. If the colored tabs on the board are not already in an up position, flip them up.

3. Holding the board by the levers, with the brown lever on the right, slide it into the thin grooves located on the inner walls of the card cage.

   NOTE: The slots' connectors in the bottom of the cage are staggered to prevent you from inserting the board into the wrong slot.

   The tabs on the CPU and I/O boards should be resting in the notches along the top of the cage.

   The tabs on the memory boards should be resting on the card cage frame.

4. Push down the levers simultaneously to lock the board into place. You may have to center the bottom edge of the board in the slot connector. If so, touch only the plastic edges of the board. Do not touch the copper strips at the edge of the board.

   NOTE: At this point, the rounded tabs below the levers should be set in the lower notches on the plastic card cage.

Replacing the Card Cage

1. Slide the card cage back into the Lisa.

2. The cage will offer some resistance for the last 1/4 inch, while the cage connectors slide into their slots inside the Lisa. You might have to hold the frame with your fingers and press with your thumbs against the bottom of the cage.

3. Replace the rear panel.

REMOVING AND INSTALLING THE MOTHERBOARD:

Removing the Motherboard

1. Disconnect the AC power cord from the wall outlet and from the back of the Lisa.
2. Disconnect all peripheral connectors from the back of the Lisa.
3. Remove the rear panel.
4. Remove the card cage.
5. Remove all expansion cards. Note that the colored levers on the left side of the cage boards match the indicator arrows imprinted on the card cage right next to the levers.
6. Remove the I/O, CPU, and Memory boards from the card cage.
7. Turn the card cage upside down and remove all six Phillips screws.
8. Lift off the motherboard (with pan).

Installing a New Motherboard

1. Place the empty card cage so that the bottom is facing up.
2. Place the motherboard (with pan) on the card cage and orient it so that the row of external connectors is just above the cage bar (see Figure 8, #4).
3. Replace, but do not tighten, all six Phillips mounting screws.
4. Tighten the six mounting screws.
5. Turn the card cage right side up.
6. Replace the CPU, I/O, and Memory boards.
7. Replace any expansion cards previously removed.
8. Replace the card cage.
9. Replace the back panel.

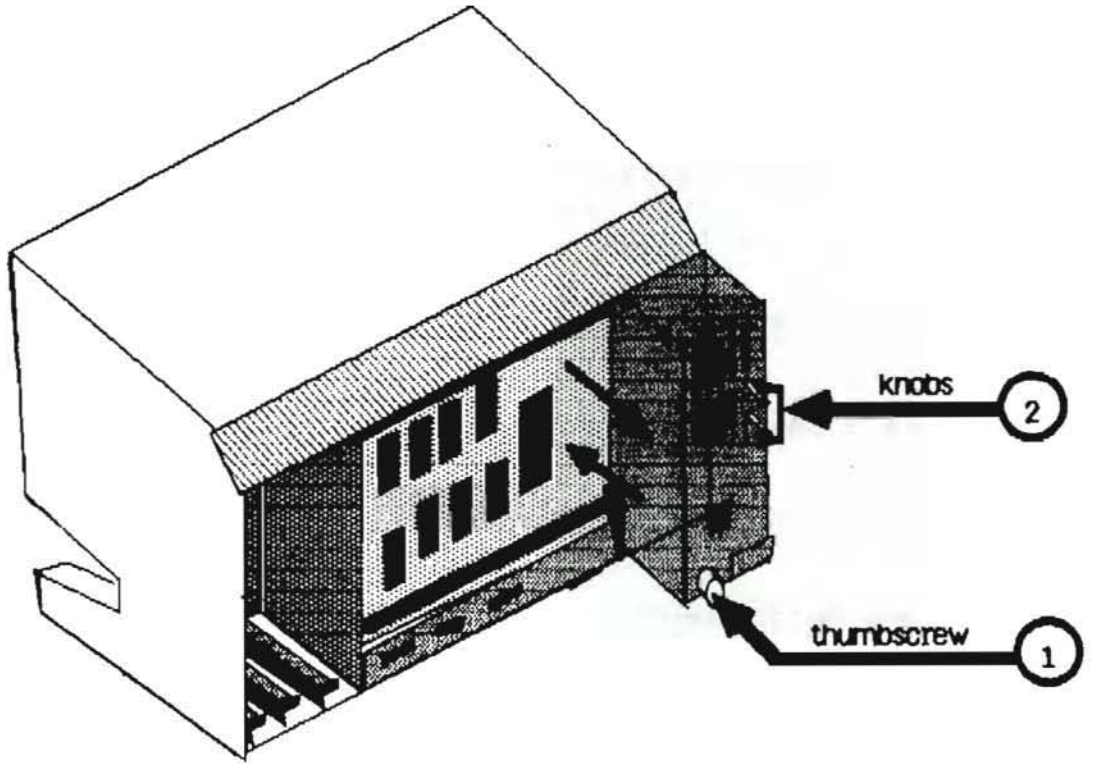

FIGURE 19

REMOVING AND REPLACING THE POWER SUPPLY:

Removing the Power Supply

1. Turn off the Lisa and disconnect the AC power cord.

2. Turn off and disconnect all peripheral connectors from the back of the Lisa.

3. Remove the rear panel.

4. Turn the thumbscrew (see Figure 19, #1) at the base of the power supply counterclockwise.

   The screw loosens but does not come free from the module.

5. Hold the module by the metal tab and pull it out of the cabinet. You might have to jiggle the module to loosen it.

Replacing the Power Supply

1. Orient the new power supply with the two white knobs (see Figure 19, #2) pointed toward you, and the edge connector pointed towards the Lisa.

   CAUTION: Do not touch the edge connector fingers.

2. Holding the power supply by the metal tab, slide it into the Lisa.

3. For the last 1/4 inch, the module will resist insertion. Put one thumb on the bottom and one thumb on the top of the module, and jiggle the power supply into place. It is in place when the top is even with the frame and the bottom is about 1/4 inch inside the frame.

4. Push the thumbscrew down, and then turn it clockwise until it is tight.

5. Replace the rear panel.

REMOVING AND INSTALLING THE SOFTSWITCH ASSEMBLY (ON-OFF SWITCH)

Removing the Softswitch Assembly

1. Remove the front panel.
2. Remove the rear panel.
3. Remove the card cage.
4. Remove the top panel.
5. Remove the disk drive assembly.
6. Remove the disk drive cables from the two clamps on the bottom of the disk drive chamber. Apply downward pressure to the tab on the right side of the clamp and simultaneously pull up on the body of the clamp. Move the two cables back and out of the way.
7. Locate the softswitch assembly in the well of the disk drive chamber (right behind ON-OFF switch).
8. Remove the cable from the softswitch PC board connector. (Push the tabs apart to release the cable.)
9. The softswitch is attached to the floor of the Lisa by two Phillips screws, one on each side of the softswitch assembly. Remove the screws and lift the softswitch out.

Installing a New Softswitch Assembly

1. Place the new softswitch inside the well of the disk drive chamber and position it so that the switch and keyboard jack fit through the openings at the lower front of the Lisa.
2. Replace the two Phillips screws.

REMOVING AND INSTALLING THE DISK DRIVE CABLE ASSEMBLY
(Lisa 2 and Lisa 2/10)

Removing the Disk Drive Cable Assembly

1. Turn off the Lisa.

2. Turn off and disconnect all peripherals.

3. Remove all the parts listed below to access the disk drive cable:

   a. Front panel
   b. Disk drive module
   c. Rear panel
   d. Card cage
   e. Top panel

   WARNING: THE CRT MUST BE DISCHARGED BEFORE REMOVING IT.

   f. CRT
   e. Video board

4. Remove the disk drive cables from the two clamps on the bottom of the disk drive chamber. Push down on the tab at the right side of the clamp and simultaneously pull up on the body of the clamp.

5. Remove the cable from the board of the ON-OFF switch (push the tabs apart to release the cable).

6. Use a 1/4 inch nutdriver to remove the nuts from the card cage side of the connector.

7. Lift the connector out through the disk drive chamber.

Installing the Disk Drive Cable Assembly (Lisa 2 and Lisa 2/10)

1. Place the edge connector in the cutout closest to the disk drive chamber. Tighten the nuts from the card cage side.

2. Plug the softswitch cable connector into the PC board just behind the ON-OFF switch. Press down firmly on the connector until the locking latches snap into place.

3. Follow steps a through b d to route the two drive cables properly through the cable clamps on the floor of the disk drive chamber.

    a. Place the smaller ribbon cable underneath the larger one.

    b. Route the cables through the clamp nearest the back of the drive chamber, leaving the clamp open.

    c. Carefully place the cables in the clamp nearest you and push down on the body of the clamp to lock it.

    d. Route the cables back through the rearmost cable clamp and lock into place.

apple computer

Lisa 2 Technical Procedures

Section 1.A

HDA Packing For Shipment

Contents:

The HDA Packing For Shipment Procedure.....1.A.3

NOTE: This procedure applies only to the HDA in the Macintosh XL (Lisa 2/10) computer.

apple computer

HDA Packing For Shipment

Introduction:

The HDA is a Winchester type hard disk drive and must be packaged properly to avoid damage to the media during shipment.

It is often not intuitively obvious how the HDA fits into its packaging materials.

To perform this task, patiently follow the instructions in this procedure and pay particular attention to the illustrations.

Equipment Needed:

Lisa Technical Procedures Manual
Service HDA Packaging Kit

Procedure:

1. Remove the disk drive module from the Macintosh XL (Lisa 2/10) following the Lisa Technical Procedures.

2. Remove the Micro disk drive from the disk drive module following the Lisa Technical Procedures (in the process of removing the Micro disk drive the HDA must be removed).

3. Reinstall the HDA into the carrier following the Lisa Technical Procedures.

(continued on the next page).

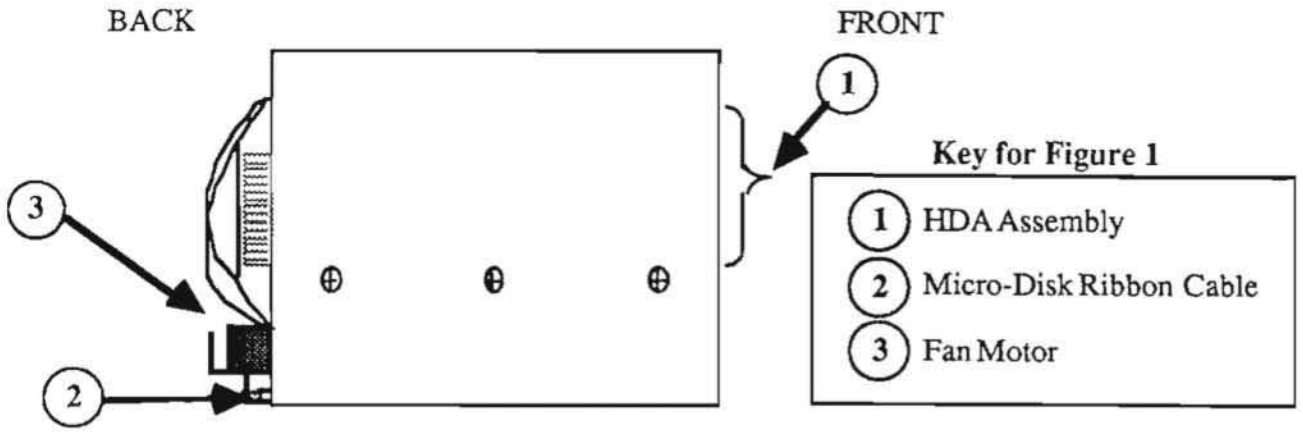

FIGURE 1: CARRIER VIEWED FROM THE LEFT SIDE

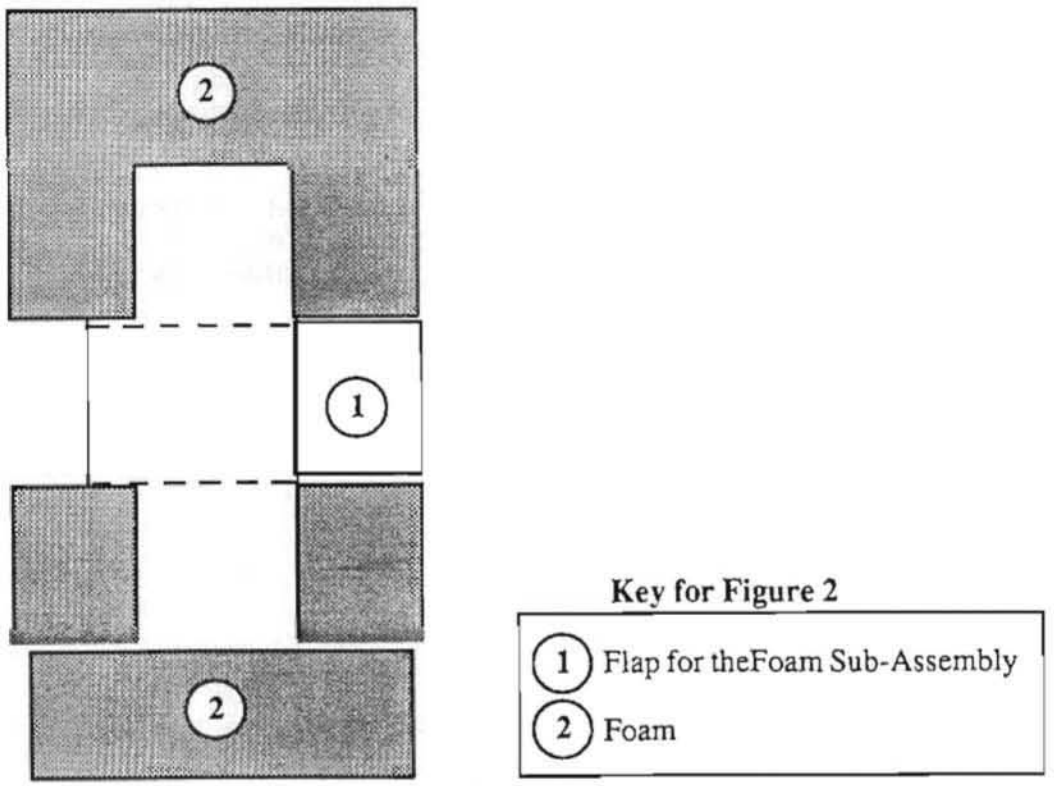

FIGURE 2

4. Check the disk drive carrier to ensure that the following items are installed.

   a. The entire HDA assembly (including five PCBs; Figure 1, #1).

   b. The Micro disk drive's multicolored ribbon cable (Figure 1, #2).

   c. The disk drive module fan motor with its two-pin fan connector inserted into J2 of the top HDA PCB (Figure 1, #3).

5. Obtain the foam sub-assembly from the HDA packing kit and lay it flat on the floor as shown in Figure 2.

NOTE: The grey area in all illustrations of the foam sub-assembly indicate foam.

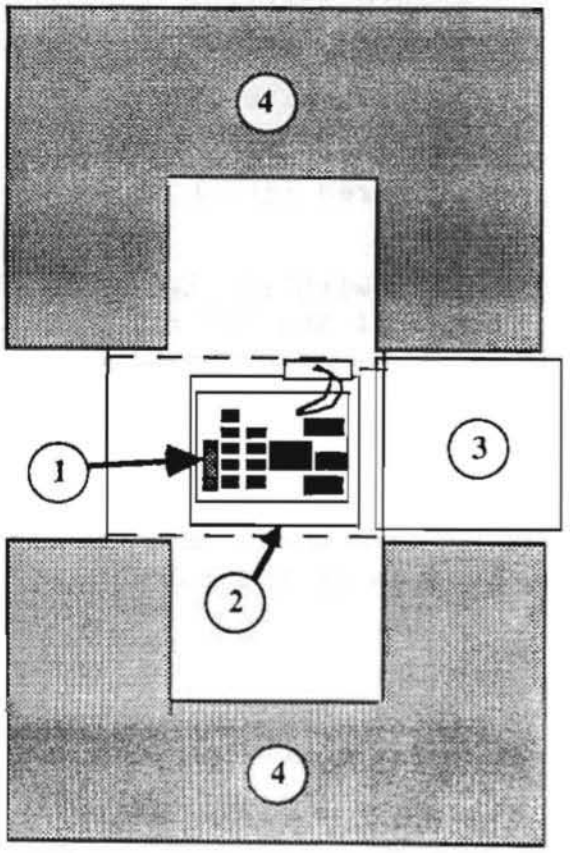

Key for Figure 3

1	J3 Ribbon Cable Connector
2	Front of Carrier
3	Flap for Foam Sub-Assembly
4	Foam

FIGURE 3

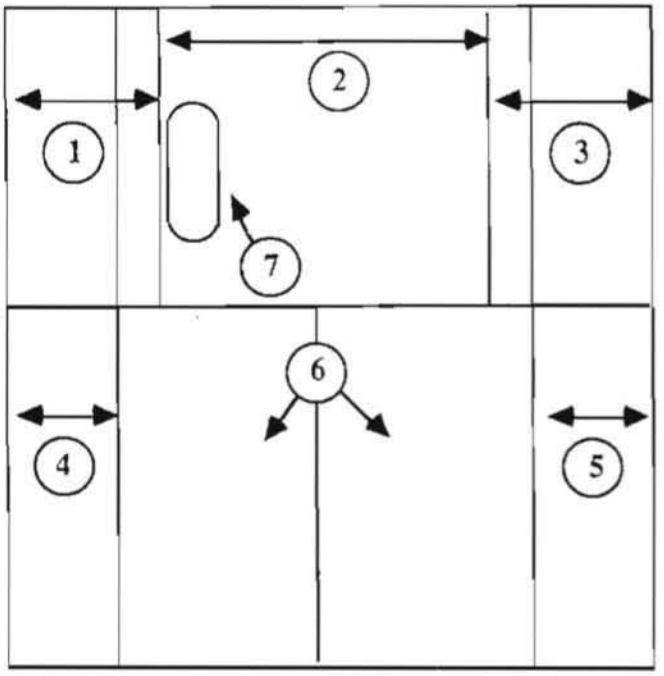

Key for Figure 4

1	Spacer Panels
2	
3	
4	
5	
6	Spacer Flap
7	Spacer Notch

FIGURE 4: SPACER

6. Position the disk drive carrier on the foam sub-assembly as shown in Figure 3.

NOTE: The cardboard spacer from the HDA packing kit will be used to protect the top of the HDA.

7. Hold the spacer panel in front of you as shown in Figure 4. Remove the notch (Figure 4, #7) from its cutout and become familiar with the spacer panels as labelled in Figure 4.

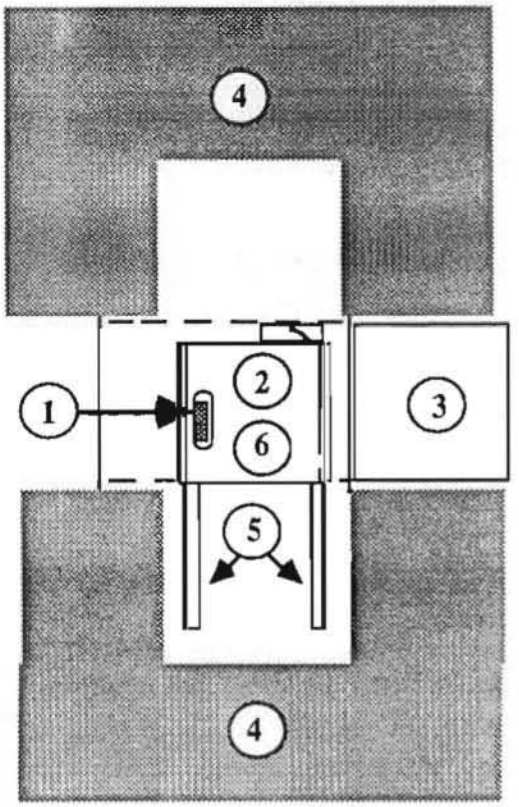

Key for Figure 5

1	J3 Ribbon Cable Connector
2	Spacer Panel 2
3	Flap for the Foam Sub-Assembly
4	Foam
5	Spacer Panel's 4, 5, and Spacer Flaps
6	Spacer Panels 1 and 3 Folded Up

FIGURE 5

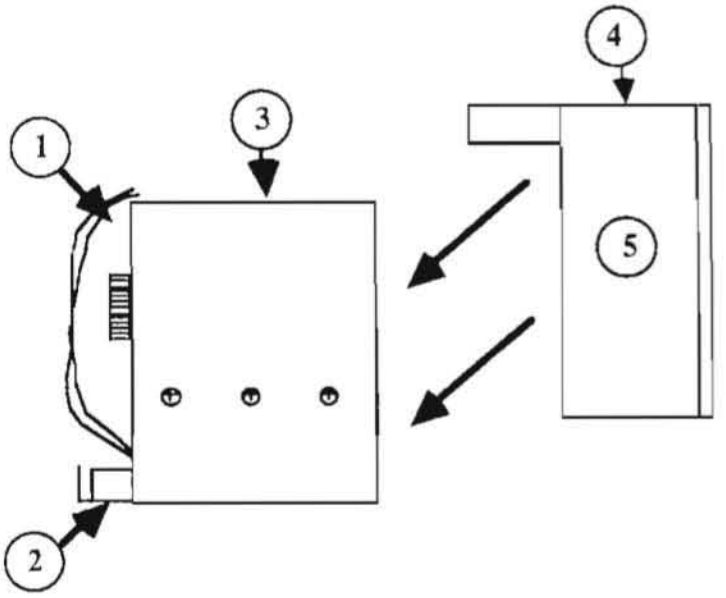

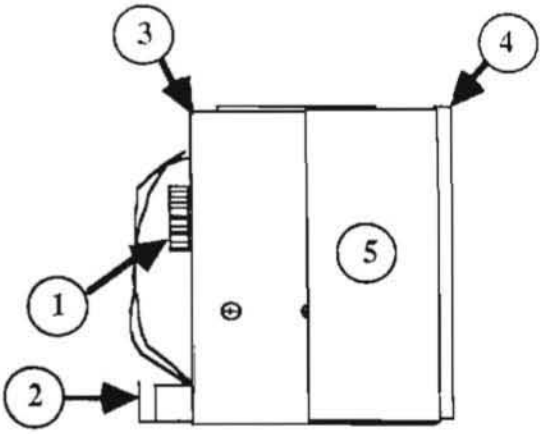

Key for Figure 6

1	Ribbon Cable
2	Fan
3	Disk Drive Carrier
4	Spacer
5	Spacer Flap

FIGURE 6

NOTE: The following step will have you install the spacer into the top of the carrier. This will require a little maneuvering and the spacer may tend to pop out because it is a tight fit.

8. Insert panel 2 into the top of the carrier so that the notch hole fits over the J3 ribbon cable connector on the top PCB (Figure 5, #1). You will have to fold panels 1 and 3 up to do this step. (view the folded spacer from the **top** and compare it to Figure 5 to ensure a correct fit).

9. Leave the spacer in the carrier and fold panels 1 and 3 in until they meet and are flat over the HDA. At this point panels 1, 2, and 3 should form a small box in the top of the carrier with panels 1 and 3 meeting on the top.

10. While holding panels 1 and 3 together fold the flaps down so that panels 4 and 5 cover the front of the carrier and the flaps are wrapped around its sides (view the foam sub-assembly and the carrier and spacer setting on it **from the side** and compare it to Figure 6 to ensure a correct installation).

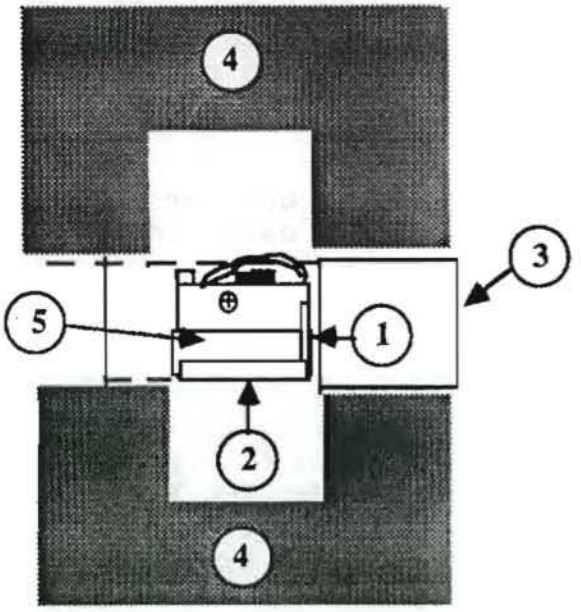

Key for Figure 7

1	Top of Disk Drive Carrier
2	Front of Disk Drive Carrier
3	Flap for Foam Sub-Assembly
4	Foam
5	Spacer Flap

FIGURE 7

11. While holding the flaps next to the sides of the carrier, lay the carrier on its side on the foam sub-assembly (Figure 7).

NOTE: The following step will require some force because the foam sub-assembly is sized slightly smaller than the carrier.

12. Fold the foam sub-assembly's flap (not a spacer flap) up against the carrier and hold it there while you fold the sides of the foam sub-assembly up over the carrier and spacer.

NOTE: The carrier should now be fully encased in the foam sub-assembly.

13. Hold the foam sub-assembly together while you put it into the box (it may be a tight fit).

Lisa 2/Macintosh XL Technical Procedures

Section 3

Video Take-Apart

Contents

Safety Precautions.....3.2
Discharging the CRT.....3.5
Removing the CRT.....3.9
Installing the CRT.....3.11
Removing the Video Board 3.12
Replacing the Video Board.....3.12
Removing the Flyback Transformer.....3.14
Replacing the Flyback Transformer.....3.14
Removing the Disk Drive Cable Assembly.....3.15
Replacing the Disk Drive Cable Assembly.....3.15
Locating the Power-Supply-to-Card-Cage Assembly.....3.16
Removing the Macintosh XL Screen Kit Transformer.....3.17
Replacing the Macintosh XL Screen Kit Transformer.....3.18
Disposing of the Cathode-Ray Tube (CRT).....3.19

> A videotape of these procedures is available. Refer to the Prices section of your Service Programs binder for part number and price.

NOTE: The letters in the margin refer to sections of the videotape. The circled step numbers following those letters mark steps that are demonstrated in corresponding sections of the videotape.

SAFETY PRECAUTIONS

The Lisa, with its built-in video monitor, is harmless as long as you're just watching the display. Removing the cover, however, exposes you to the high-voltage Cathode-Ray Tube (CRT)--the picture tube. The following precautions must be taken to ensure your safety, especially when you are making adjustments on a live monitor.

Safe Electrical Setup

1. **Be sure your outlet is correctly wired and properly grounded.**

   Polarity and ground testers are available from most electronics stores. Test all outlets in your service area before working on **any** electrical equipment. If you have any doubts about your building's wiring, consult a qualified electrician.

2. **Never use an adaptor plug to connect a monitor's three-prong power plug to a two-prong wall outlet.**

   Adaptors defeat the ground pin, which is a safety feature.

3. **Use an isolation transformer between the monitor and the outlet when performing live adjustments.**

   Order an isolation transformer from your electronics distributor, and make it a practice to use it whenever you are working with **any** monitor or other powered system under test. An isolation transformer isolates the circuitry of the system under test from the power company's circuitry, reducing the likelihood of a fatal shock should you simultaneously contact high voltage and anything else that is earth-grounded.

   Do not connect more equipment to the transformer than the wattage capacity of the transformer will bear. (It is usually best to connect only one piece of equipment at a time.) We recommend an isolation transformer with a minimum wattage capacity of 500 VA, with a grounded three-prong cord and receptacle. Two such transformers, available from many electronics stores and distributors, are listed below:

   Triad N-57MG Stancor GIS 500

CRT Safety Rules

1. **Do not work on a monitor alone.**

   In case of accident, it could save your life to have someone else nearby. Apple recommends that your staff be trained in Cardio-Pulmonary Resuscitation (CPR).

2. **Remove rings, watches, bracelets, hanging necklaces, and other jewelry before performing repairs on a monitor.**

   Metal jewelry is an excellent conductor of electricity. Removing jewelry will reduce the possibility of electric shock.

3. **Never use a grounding wriststrap or heelstrap or work on a grounded workbench mat when discharging a monitor or when performing live adjustments.**

   Grounding wriststraps, heelstraps, and mats are used to protect sensitive components from the damaging effects of electrostatic discharge from your own body or clothing. Even though they contain a one-megohm resistor and are designed to conduct only small electrical charges, we recommend that they be used **only** when working on "dead" (uncharged) equipment.

4. **Wear safety goggles when working with a CRT.**

   The CRT contains a high vacuum. If cracked or broken, it can implode (collapse into itself, then explode). To protect your eyes from serious injury, always wear safety goggles when working on or near a CRT, and be careful of other people in the area.

5. **Before working inside a monitor, turn off the power and disconnect the AC power cord.**

   Certain parts of a monitor chassis are hot (electrified) when the monitor is under power. Except when you must have the power on (for example, when making live adjustments), never work on a plugged-in monitor--even if you have the power turned off.

6. **Keep one hand in your pocket or behind your back when working on a live monitor.**

   This practice reduces the risk of current passing through your heart, should you accidentally contact high voltage.

7. **Always discharge the anode before touching anything inside the monitor.**

   The anode of the CRT maintains a charge of about 15,000 volts DC (even when the power is off). Before touching any internal components you must discharge this voltage. The anode can regain some charge, even after it has been discharged. If the service procedure takes more than 30 minutes, the anode should be discharged again.

8. **Never touch the anode connector or the anode aperture.**

   Normally the anode aperture has a connector plugged into it (Figure 1, #2). When a CRT is replaced, the anode connector is removed, exposing the anode. The anode can maintain a charge of several thousand volts (even after the power is off).

9. **Do not pick up or handle a CRT by its neck.**

   To prevent an implosion, take every precaution against breaking the tube. Be especially careful with the neck, the area where the tube is the thinnest.

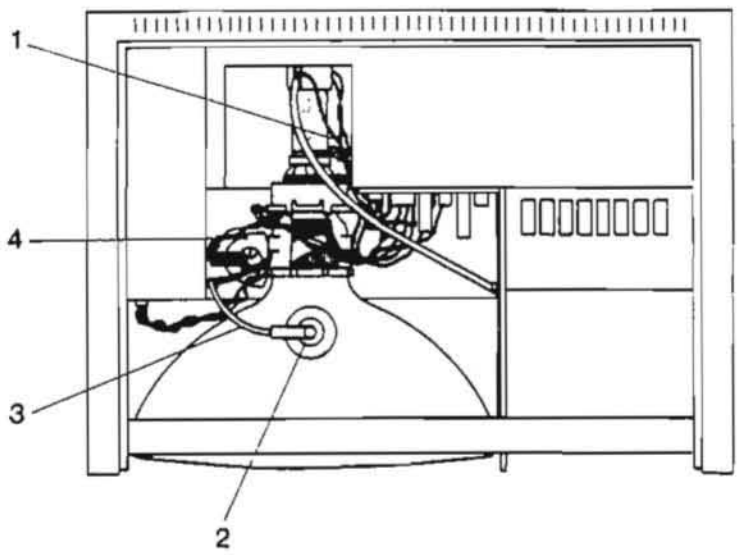

FIGURE 1

Live Adjustment Rules

In addition to the precautions listed on the previous pages, never touch the following components when adjusting a live CRT:

1. The yoke wires (Figure 1, #1)
2. The anode connector (Figure 1, #2)
3. The anode wire (Figure 1, #3)
4. The flyback transformer (Figure 1, #4)

DISCHARGING THE CRT

WARNING! WHEN WORKING ON A LISA THE FOLLOWING STEPS CAN BE DANGEROUS IF NOT EXECUTED PROPERLY.

A (1.) If the Lisa is on, press the ON-OFF switch. When it is finished powering down, unplug the Lisa.

(2.) Remove the front panel, back panel, and card cage.

(3.) Remove the top of the Lisa. It is joined to the chassis by screws, which are permanently attached to the chassis. These two screws are found 'hidden' on the underside of the roof of the card cage chamber toward the back of the machine. To access them you have to poke your Phillips screwdriver up through the round holes in the flap that is part of the roof of the card cage chamber. See Figure 2, #1.

FIGURE 2

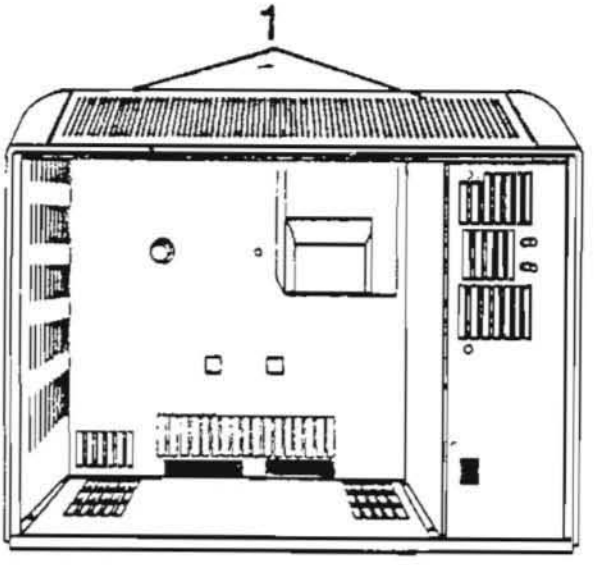

(4.) Lift off the top panel from the back of the Lisa.

(5.) **Put on the safety goggles.**

(6.) **Remove any rings, wrist watches, and bracelets.**

FIGURE 3

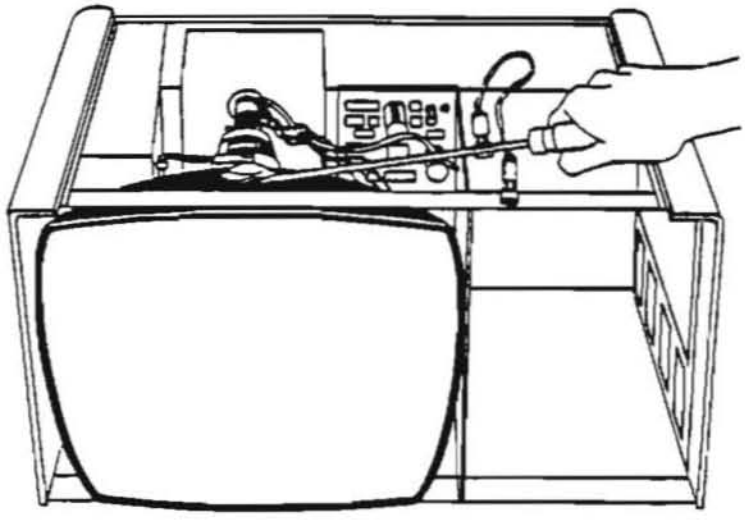

FIGURE 4

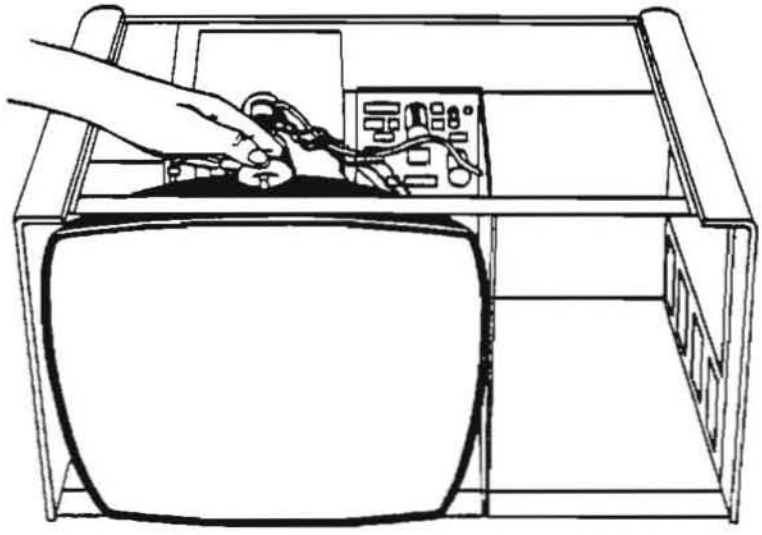

B 7. Attach one alligator clip to the screwdriver two inches from the handle, and the other to the metal chassis.

8. Put one hand in your pocket or behind your back. With your other hand grasping ONLY the insulated handle of the screwdriver, insert the screwdriver under the CRT anode cap. See Figure 3. Be sure the blade comes into contact with the anode ring.

CAUTION: DO NOT USE FORCE. If it is difficult to get the screwdriver under the anode cap, put down the large screwdriver and use a smaller screwdriver to loosen the suction of the anode cap on the tube. Remember, keep one hand behind your back while loosening the suction. Once the suction is relieved, proceed to discharge the anode with the large screwdriver as described above.

9. Remove the screwdriver.

10. Remove the alligator clips.

11. With one hand behind your back remove the anode cap. (Pull back on the rubber of the anode cap. First push one way, then the other, to loosen and remove it.) See Figure 4.

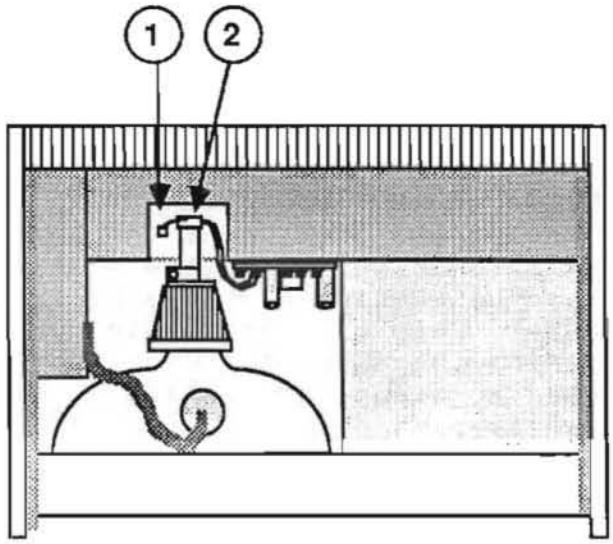

FIGURE 5A

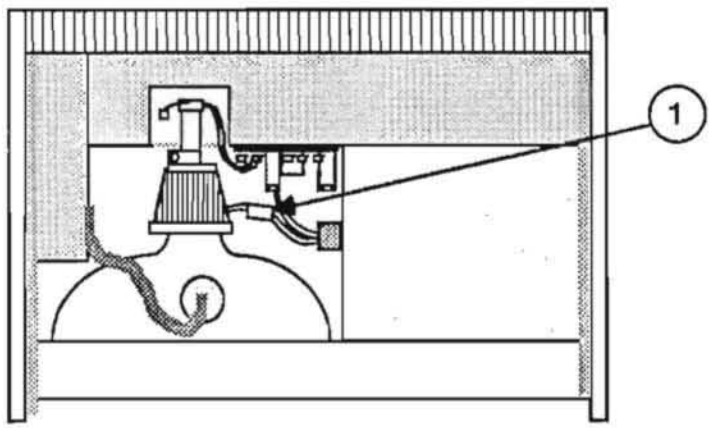

FIGURE 5B

REMOVING THE CRT

1. Put on safety goggles, remove the cover, and **discharge the CRT.**

   WARNING: When working in the video chamber, avoid touching the anode and the anode cap--even after the CRT has been discharged. The anode can regain some charge over time.

1A. Place the Lisa/Macintosh XL on a grounded workbench mat and put on your grounding wriststrap.

The CRT cup (Figure 5A, #1) is the part of the chassis that surrounds the CRT neck. In the following steps, you will remove the cables, screws, and ground wire that are attached to the CRT cup. The ground wire (the single white wire that runs from the yoke to the contact on the chassis) is difficult to remove safely. You will do that last so that you can orient the CRT cup away from the CRT neck.

C (2.) Remove the wires from the clamps on the side of the CRT cup.

(3.) Supporting the cup, remove the four screws that secure the cup to the chassis. Three screws are accessed through the video chamber and one through the card cage chamber.

(4.) Remove the round plug from the socket at the end of the CRT neck (Figure 5A, #2). (If the plastic guide comes off the tube with the plug, replace it.)

(5.) Move the CRT cup so you can grasp the ground terminal and remove it safely from the contact on the floor of the CRT cup.

(6.) Turn the Lisa so that the front is facing you.

(7.) **For unmodified Lisa 2/Macintosh XL (Figure 5A):**

Remove the two (upper) yoke connectors from the video board. Be careful of the 25-volt capacitor directly above the second plug.

For modified Lisa 2/Macintosh XL (Figure 5B):

Disconnect the connector (Figure 5B, #1) between the screen kit transformer and the CRT yoke. Then disconnect the blue and red connector located at the right side of the video board.

WARNING: In the following steps, avoid touching the red-painted anode area of the CRT (Figure 5C, #1).

WARNING: If some time has elapsed since you discharged the CRT, discharge it again before you remove it. (The anode can regain some charge over time.)

D (8.) Use the magnetic nutdriver to remove the screws from the four front corners of the CRT, removing the top screws last. Use one hand to steady the CRT while removing the top two screws.

(9.) Carefully remove the CRT by pulling it toward you.

WARNING: Do not hit the tube against the chassis frame. Do not break the seal of the yoke to the neck.

10. Set the CRT aside, face down on a flat soft surface.

WARNING: If you are going to dispose of the CRT, read and follow the instructions for safe devacuuming in "Disposing of the Cathode-Ray Tube (CRT)" at the end of this section.

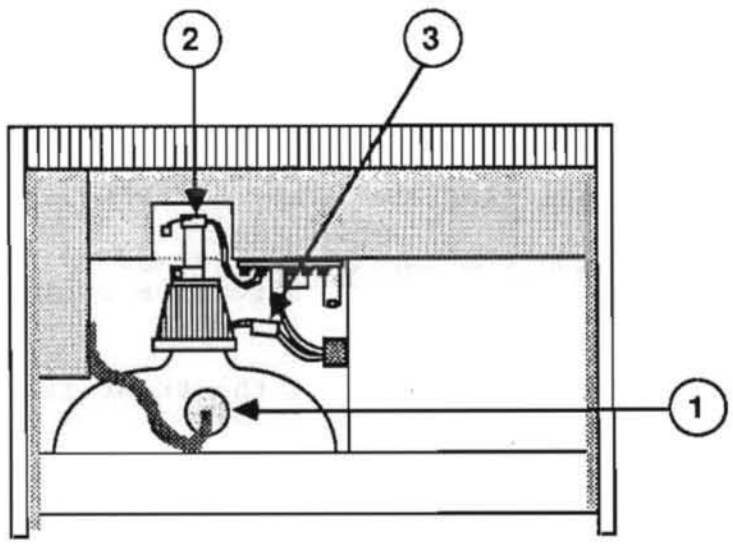

FIGURE 5C

INSTALLING THE CRT

I (1.) Reclamp the flyback cable (red, high voltage wire) to the cable clamps on the wall of the video chamber.

(2.) Reconnect the ground wire (extending from the round yoke connector) to the contact on the floor of the CRT cup. Replace the CRT cup (Figure 5C, #2).

(3.) Reclamp the yoke socket cables to the cable clamps located on the wall of the CRT cup.

(4.) Carefully place the CRT where it is to be mounted (remember, the anode should be facing up).

(5.) While holding the CRT in place with one hand, attach the round yoke socket to the end of the CRT neck. Make sure that the pins are aligned correctly with the connector before pushing it on. The yoke connector only fits one way.

(6.) While supporting the CRT with one hand, install the bolts. Start all four bolts first; then tighten them down.

(7.) **For unmodified Lisa 2/Macintosh XL:**

Connect the wires from the yoke to the connectors on the video board. When facing the front of the Lisa, the yellow and green wires go on the left side of the board and the red and blue wires go on the right side of the board.

For modified Lisa 2/Macintosh XL:

Connect the yellow and green yoke connector to the connector coming from the screen kit transformer. (See Figure 5C, #3.) Then connect the blue and red yoke connector to the socket at the right side of the video board.

CAUTION: Do not mix up these wires or you will damage the CRT.

(8.) Clip the anode cap into the CRT.

(9.) Replace the top.

(10.) Replace the card cage.

(11.) Replace the back panel.

(12.) Replace the front panel.

REMOVING THE VIDEO BOARD

1. Discharge the CRT.

2. Remove the two yoke plugs (upper connectors) from the video board. Be careful not to injure the 25V capacitor directly above the second plug. These connectors can be difficult to remove.

E 3. Remove the flyback transformer connector from the video board. Squeeze the release catches on the top and bottom of the connector and use a rocking motion to pull the connector free.

4. Remove the two Phillips screws that attach the video board to the CRT.

   NOTE: If the screws drop and remain on the bottom, the flyback may short when the computer is turned on.

5. Pull out the video board.

REPLACING THE VIDEO BOARD

NOTE: IGNORE STEP 1 IF THE CRT IS ALREADY INSTALLED.

H 1. Replace the CRT cup.

2. Slide the video board into its connector.

3. Screw in the two screws that hold the video board in place.

4. Connect the wires from the yoke to the connectors on the video board. When facing the front of the Lisa, the yellow and green wires go on the left side of the board and the red and blue wires go on the right side of the board.

5. Attach the flyback transformer connector.

6. Replace the top.

FIGURE 6

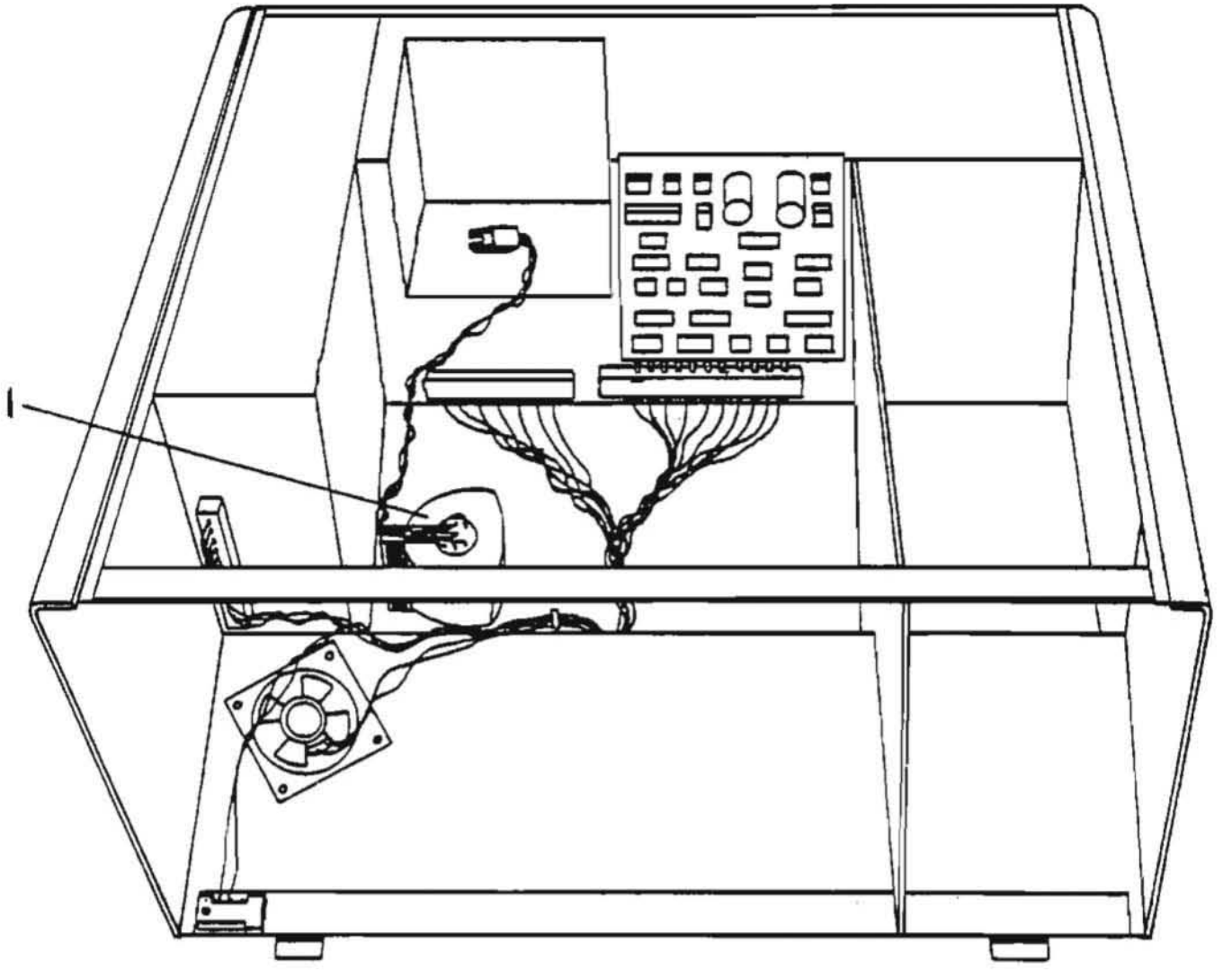

REMOVING THE FLYBACK TRANSFORMER

1. Discharge the CRT.

2. Remove the CRT.

F (3.) Remove the power supply

(4.) Remove the bottom pan by removing six phillips screws; four from the card cage chamber floor, and two from the power supply chamber floor.

(5.) Tilt the back of the Lisa forward and the bottom pan will fall free.

(6.) Turn the Lisa so that the front is facing you.

(7.) Pull the high voltage wire loose from the clamps on the side of the chassis.

(8.) Remove the flyback connector wires from the cable clamp near the floor of the video chamber.

(9.) Turn the chassis upside down with the front facing you.

(10.) While holding the flyback (See Figure 6, #1) from underneath with one hand, remove the two nuts that attach the flyback to the chassis from the bottom of the machine (which is now facing up) using a number 6 nutdriver.

11. Turn the chassis right side up.

REPLACING THE FLYBACK TRANSFORMER

G (1.) With the chassis lying upside down, orient the flyback so that the screws are sticking through the bottom of the chassis. Gently tighten the bolts.

Caution: These bolts are delicate. If you tighten the nuts too much the bolts may break off.

(2.) Replace the bottom plate. Slide the little feet of the bottom plate up into the bottom of the chassis. Carefully set the Lisa right side up. Replace the six screws, starting all of them first before tightening each one.

(3.) Replace the power supply.

4. Replace the CRT.

REMOVING THE DISK DRIVE CABLE ASSEMBLY

1. Remove the disk drive cables from the two clamps on the bottom of the disk drive chamber. Apply downward pressure to the tab on the right side of the clamp (perhaps with the handle of a screwdriver) and simultaneously pull up on the body of the clamp.

2. Remove the cable from the board of the ON-OFF switch. (Push the tabs apart to release the cable.)

3. Remove the disk-drive-to-card-cage connector from the bottom back panel of the disk drive chamber. It is attached with two screw/starwasher/bolt assemblies. Access the bolt on the left side of this connector through the video chamber. The screws are accessible through the card cage chamber. Hold the bolt steady with a 1/4" crescent wrench or needlenose pliers from inside the video chamber and loosen the screw from inside the card cage chamber. The bolt on the right hand side of the connector is accessible through the disk drive chamber.

REPLACING THE DISK DRIVE CABLE ASSEMBLY

1. Replace the disk-drive-to-card-cage connector. Push the screw in from the card cage side, hold the nut and starwasher in place, and tighten the screw.

2. Plug ON-OFF switch cable into ON-OFF switch/keyboard assembly board.

3. Place the left disk drive cable on top of the right disk drive cable and insert both into the clamps on the bottom of the disk drive chamber. Lock the clamps.

LOCATING THE POWER-SUPPLY-TO-CARD-CAGE-ASSEMBLY

The power-supply-to-card-cage-assembly winds through the video chamber from the power supply chassis frame to where it splits and supplies power to both the card cage and the video board.

1. The safety interlock switch, which is attached by one screw to the front, bottom, left of the video chamber, is located at Figure 7, #1.

2. The speaker-to-assembly connector is located at Figure 7, #2.

3. The connector to the power supply chassis frame is located at Figure 7, #3. When you are replacing the connector be sure to replace the ground under the star washer when replacing the screw.

4. The video board connector is located at Figure 7, #4. When you are replacing the connector, be sure to replace the ground under the star washer when replacing the screw.

5. The assembly is attached to the card cage at Figure 7, #5.

FIGURE 7

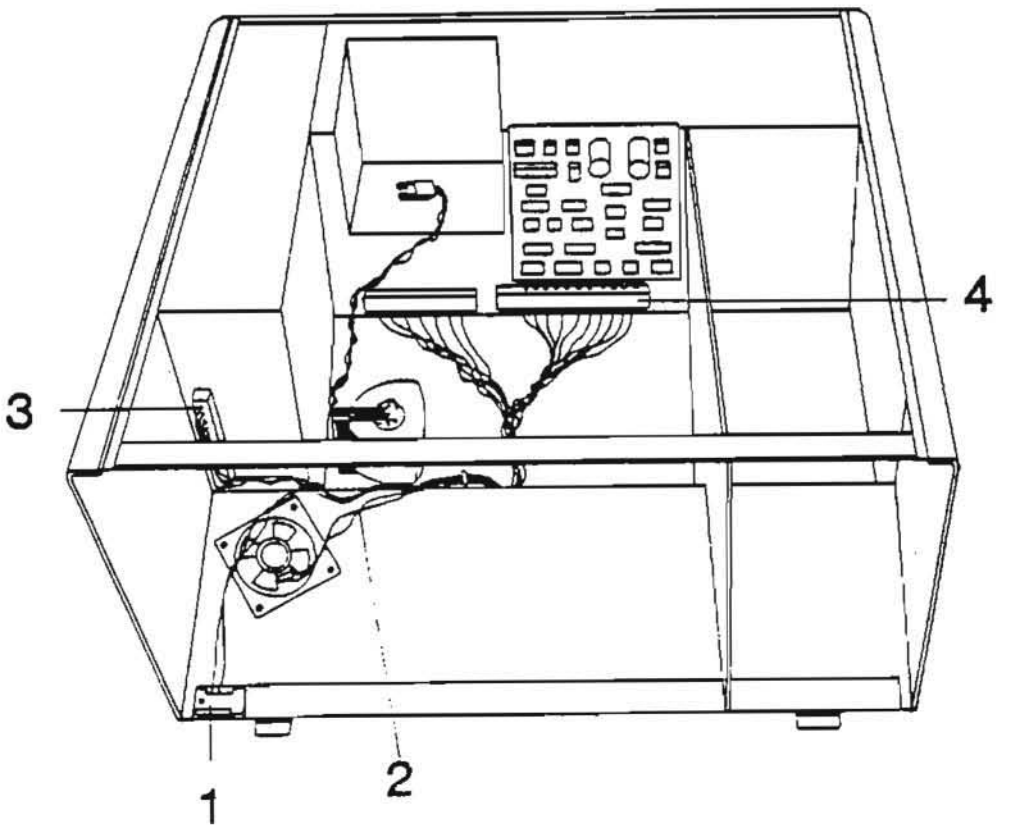

REMOVING THE MACINTOSH XL SCREEN KIT TRANSFORMER

NOTE: The Macintosh XL Screen Kit is located in the video chamber of all Modified Lisa 2/Macintosh XL systems. If you are installing the screen kit for the first time, turn to **Upgrade and Retrofits, Section 4** for installation procedures.

1. Discharge the CRT. (See **Discharging the CRT.**)

2. Locate the screen kit transformer (Figure 8, #1). It is attached to the wall of the video chamber with adhesive tape.

3. Disconnect the connector (Figure 8, #2) located between the screen kit transformer and the CRT yoke.

4. Disconnect the green and white transformer connector from the left side of the video board.

5. Carefully peel the screen kit transformer (Figure 8, #1) off the wall of the video chamber.

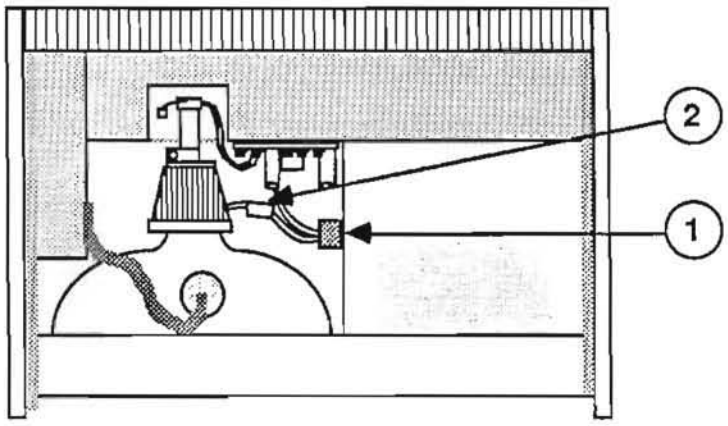

FIGURE 8

REPLACING THE MACINTOSH XL SCREEN KIT TRANSFORMER

1. Clean the section of the video chamber where the transformer was previously attached. This is the section adjacent to the disk drive chamber.

2. Connect the yoke connector (green and yellow wire) to the male connector attached to the transformer. (See Figure 9, #1.)

3. Connect the female transformer connector to connector P2 at the left side of the video board.

4. Peel the protective paper off the adhesive tape at the bottom of the replacement transformer.

5. Press the bottom of the transformer firmly to the side (cleaned section) of the video chamber wall.

6. Clip the anode cap (Figure 9, #2) back into the CRT.

7. Replace the top.

8. Replace the card cage.

9. Replace the back panel.

10. Replace the front panel.

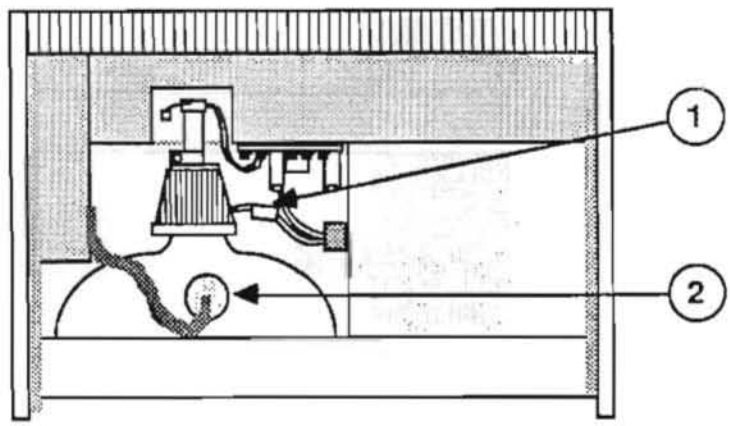

FIGURE 9

DISPOSING OF THE CATHODE-RAY TUBE (CRT)

WARNING: Remember that a CRT can implode unless it is devacuumed. Putting a defunct CRT into a trash receptacle without devacuuming it can endanger other people.

Materials Required

Thick cardboard box large enough to conceal the CRT
Large, sharp diagonal cutters
Large pliers
Duct tape
Safety goggles
Gardening gloves
12-inch square of cloth or heavy paper

Devacuuming the CRT

1. Put on the safety goggles.

2. In the side of the box about six inches from the bottom, cut or drill a hole just large enough to accommodate the very tip of the CRT.

3. Place the CRT inside the box with the tip of the neck protruding through the hole, and tape the box flaps down with duct tape (Figure 10).

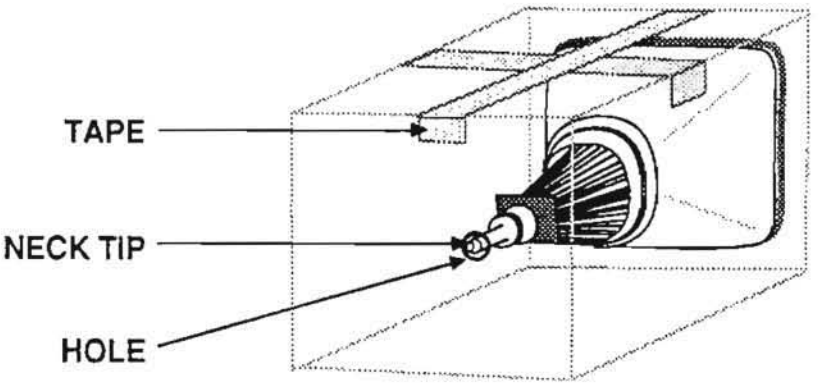

FIGURE 10

WARNING: Only the very tip of the CRT neck should be protruding through the hole in the box. The box must not have any other openings.

4. Put on the gloves.

5. Pull off the black plastic guide located at the end of the CRT neck. Using the diagonal cutters, carefully clip off the connector pins on the end of the CRT neck.

6. Tape the piece of cloth or paper onto the box (Figure 11, #1) so that it forms a veil over the opening (Figure 11, #2) but allows your hand access to the tip of the CRT. The veil's purpose is to catch the bits of glass that may fly during the following step.

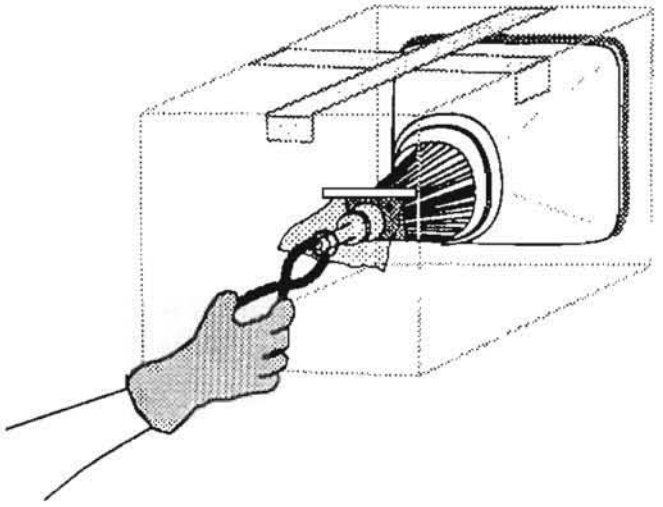

FIGURE 11

7. Make sure no one is standing nearby. Place the pliers under the veil, stand to one side, and look away while you use the pliers to snip off the exposed tip of the CRT.

   WARNING: Do not look directly at the box when cutting off the tip!

   You will probably hear a rush of air entering the CRT when the CRT vacuum breaks--but even if you don't, the procedure is complete if the inner space of the CRT is clearly visible through the opening created by the removed tip.

apple computer

Lisa 2 Technical Procedures

Section 4

Video Adjustments

Contents:

Introduction.....4.3
Tools and Equipment Needed.....4.3
Accessing the Video Assembly and the Test Patterns.....4.4
Summary of Video Adjustments: Problems and Corrections..4.5
Horizontal Phase Adjustment.....4.7
Brightness and Contrast Adjustments.....4.8
Calling up the Video Crosshatch Pattern.....4.9
Yoke Adjustment.....4.11
Height, Width, Vertical Linearity, and Centering.....4.12
Magnet Adjustments.....4.13
Finishing up.....4.14

CAUTION: BEFORE PERFORMING THESE ADJUSTMENTS, REVIEW THE SAFETY PROCEDURES IN THE LISA VIDEO TAKE-APART TECHNICAL PROCEDURE.

A videotape of these procedures is available. Refer to the Prices section of your Service Programs binder for part number and price.

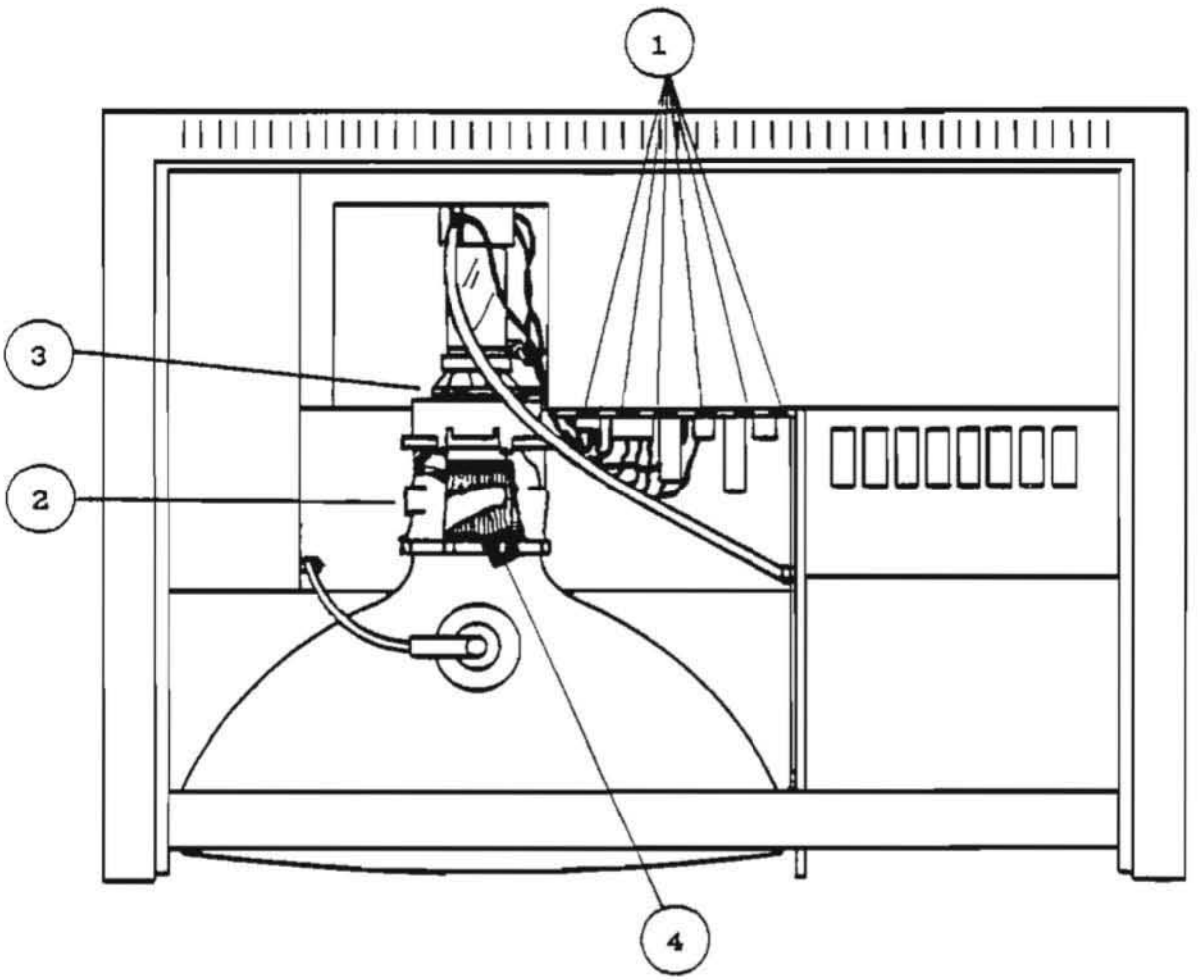

Figure 1

INTRODUCTION

You will need to perform video adjustments if you replace the CRT assembly, the flyback transformer, or the video board.

There are four major types of adjustment: the video board potentiometers (Figure 1, #1), and the CRT yoke, centering rings, and magnets (Figure 1, #2, 3, and 4). Using an alignment graticule etched with centering marks, which you can lay over the screen, you will make all four adjustments by matching a video crosshatch pattern to the graticule.

Some very old Lisa CRTs will not have spoke collars for magnet adjustments, and to add magnets to them you will have to use Funtak (available at Gemco, Woolworth's, etc.) or an equivalent adhesive.

TOOLS AND EQUIPMENT NEEDED

LisaTest 2.0 Diskette (P/N 077-8140-A)
Alignment graticule (P/N 077-8043-A)
Diagonal cutters ("dikes")
Medium Phillips screwdriver with insulated handle **and shaft**
Medium or small flatblade screwdriver with insulated handle **and shaft**
Safety goggles with closed side panels
Adjustment magnets (P/N 652-4520)
Glue: Torque Seal, Glyptol, or equivalent

WARNING: All screwdrivers used in video work should have insulated **shafts** as well as insulated handles. If you cannot find screwdrivers with insulated shafts, you can make them by putting a double layer of shrink tubing on the shaft of a normal screwdriver with insulated handle. Make sure the shrink tubing extends up to the insulated handle and covers all parts of the shaft that you might touch.

A. ACCESSING THE VIDEO ASSEMBLY AND THE TEST PATTERNS

IMPORTANT: Since the picture may expand and change position slightly as the Lisa warms up, you should let it warm up for 10 - 15 minutes before you adjust it.

1. Make sure the power is off. Remove the front and rear panels from the Lisa.
2. Remove the card cage and unscrew and remove the top panel.
3. Install the alignment graticule (pictured below) on the front panel, just as you would install a glare filter (see Take-Apart procedures).
4. Replace the card cage and the front and rear panels.
5. Insert the LisaTest diskette into the disk drive.
6. Turn on the Lisa by pushing the ON-OFF button, and, when you hear the first click, hold down the <APPLE> key while typing **2**. (This interrupts the automatic startup sequence and tells the Lisa to start up from the disk drive.)
7. If the Lisa was cold, **allow it to warm up for 10-15 minutes.**
8. Examine the Lisa picture for the problems listed in the Summary of Video Adjustments (next page).

   If there are no problems, do not continue with these procedures.

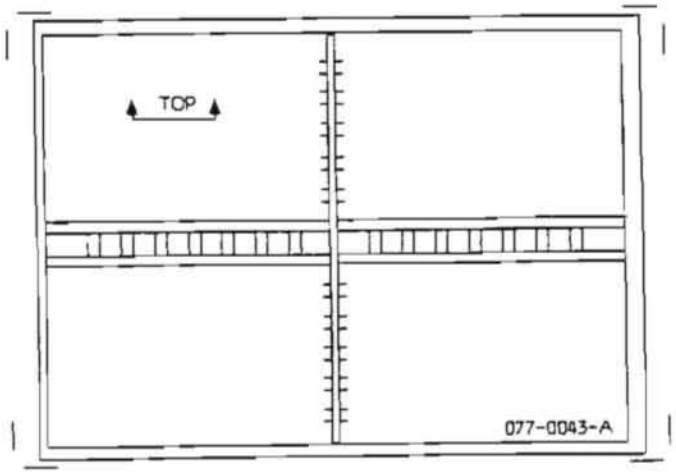

apple computer

SUMMARY OF VIDEO ADJUSTMENTS

Problem	Correction
Screen is dark.	Brightness, contrast.
Letters on screen look smudged, appear to have "shadows".	Turn down contrast trimpot.
Bent or distorted lines on crosshatch pattern or edges of picture.	Adjust magnets on yoke.
Entire picture tilted (rotated around center).	Adjust yoke.
"Shadow band" visible at left side of screen.	Horizontal Phase Adjustment.
Picture is too far to one side of the screen.	Horizontal Phase Adjustment.
Vertical distortions or distortions of scale from one part of the screen to another.	Adjust Width, Height, Vertical Linearity trimpots and centering rings.
Vertical and horizontal lines not perpendicular.	Make sure yoke is pushed fully forward on CRT neck.

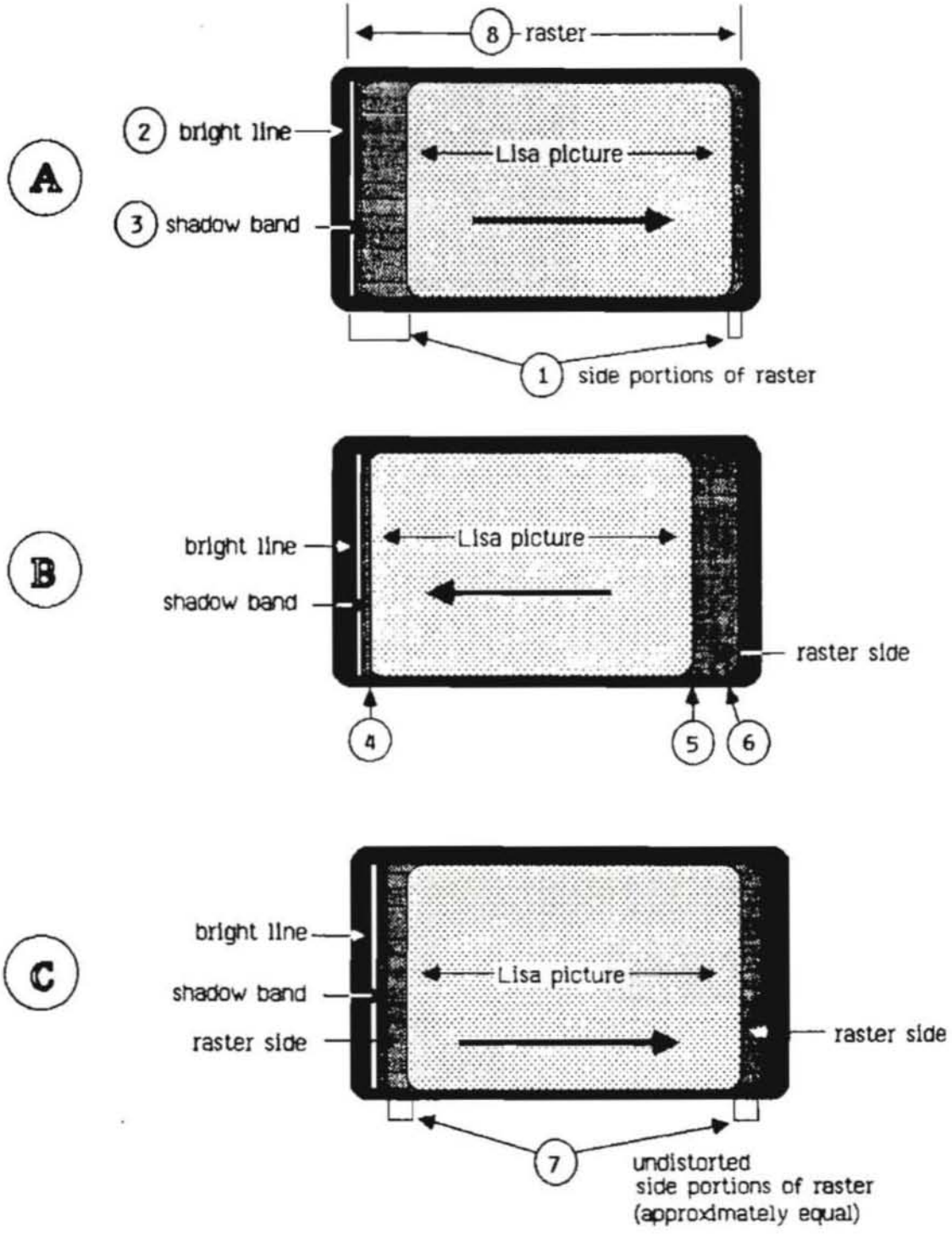
A
8 raster
2 bright line
3 shadow band
Lisa picture
1 side portions of raster
B
bright line
shadow band
Lisa picture
raster side
4
5
6
C
bright line
shadow band
raster side
Lisa picture
raster side
7
undistorted
side portions of raster
(approximately equal)

Figure 2

B. HORIZONTAL PHASE ADJUSTMENT

When you turn up the Lisa's brightness, you can see entire **raster** (that is, the area of illumination) on the screen (see Figure 2A, #8). At the left edge of the raster is a narrow band that is slightly darker than the rest of the screen (Figure 2A, #3); you will have to try hard to notice it. You will use the Horizontal Phase trimpot to move the picture outside this area of darkness ("shadow band") and center it in the undistorted part of the raster.

1. Remove all metallic objects (including your wedding ring, your watch, and any jewelry) from your hands and arms. Put on the safety goggles to protect your eyes. Keep one hand in your pocket or behind your back during these adjustments.

2. Turn up the brightness control on the back of the Lisa until the side portions of the raster appear around the Lisa picture (see Figure 2A, #1). If the picture or the raster become enlarged or distorted, turn down the brightness until normal size and shape are restored.

3. Find the Horizontal Phase trimpot on the top of the video board and use it to move the picture all the way to the right (Figure 2A).

4. At the extreme left side of the raster you will see a bright line (Figure 2A, #2). To the right of the bright line is a vertical band of shadow about 1/16 inch wide (see Figure 2A, #3: the shadow band is very slightly darker than the rest of the raster edge. If you cannot see the shadow band, use the Horizontal Phase trimpot to move the picture all the way to the left. If you still cannot see the shadow band, adjust the Brightness until you can see it.)

5. Using the trimpot, move the left edge of the picture flush with the right edge of the shadow band (see Figure 2B, #4).

6. Now observe the space between the right edge of the picture (Figure 2B, #5) and the right edge of the raster (Figure 2B, #6). Move the picture halfway through that space, so that the undistorted portions of the raster on either side of the picture are equal (see Figure 2C, #7).

7. Put a small drop of the specified glue on the trimpot, to hold it in place. Be careful not to cover up the name of the trimpot or the resistor number (e.g., R34, R22).

C. BRIGHTNESS AND CONTRAST ADJUSTMENTS

1. Turn down the brightness control on the back of the Lisa until the side portions of the raster just disappear and only the Lisa picture is visible.

2. Find the contrast trimpot (CONT) on the top of the video board. Turn it to the maximum setting that does not enlarge or distort the picture. If this causes the side portions of the raster to become visible again, turn down the brightness control on the back of the Lisa until only the Lisa picture is visible.

3. Turn down the contrast until the screen looks right. Then turn it down just a little more, so that the screen looks slightly darker than you would want it for actual use.

4. Put a small drop of the specified glue on the contrast trimpot, to hold it in place. Be careful not to cover up the name of the trimpot.

These are the proper hardware settings for brightness and contrast. From this point on, the contrast of the screen should be changed only by using the Preferences menu.

D. CALLING UP THE VIDEO CROSSHATCH PATTERN

The rest of the video adjustments require that you match a crosshatch pattern on the CRT screen to the alignment graticule. To call up the video crosshatch pattern from LisaTest, use the following procedure.

1. Access the Options menu by holding down <APPLE> and <SHIFT> and typing **S**.

2. Pull down the Options menu and choose "Check". From the "Check" window choose the crosshatch icon and click "OK". The crosshatch pattern will then appear on the screen. (To return to the desktop, press any key.)

3. Note that for each crosshatch line on the video display there are two marks on the graticule (Figure 3, #1) to define the limits of tolerance. Always try to center the video line between the two tolerance marks, as the adjustments will probably shift somewhat after you make them.

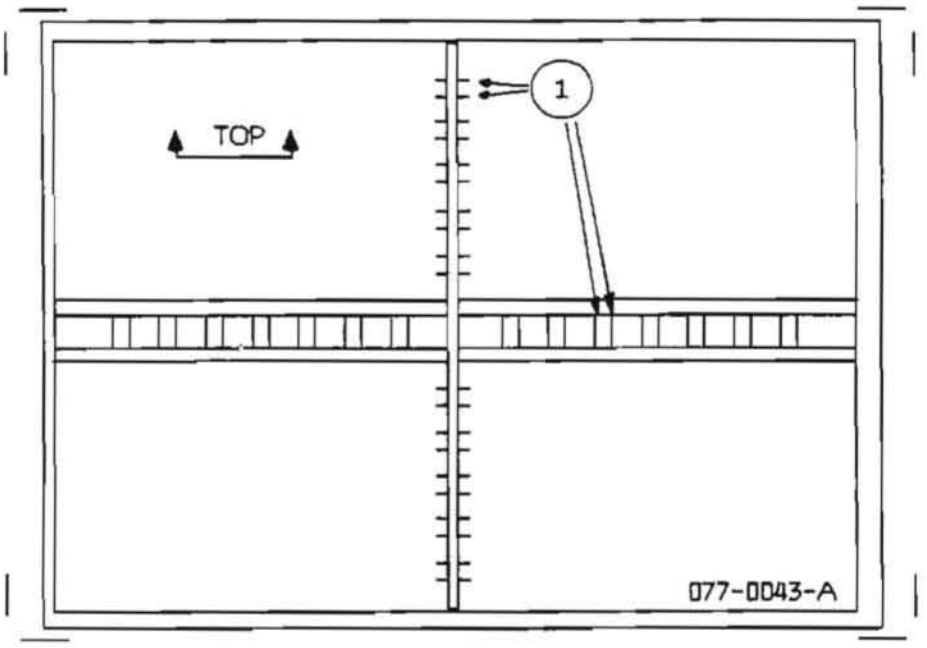

Figure 3

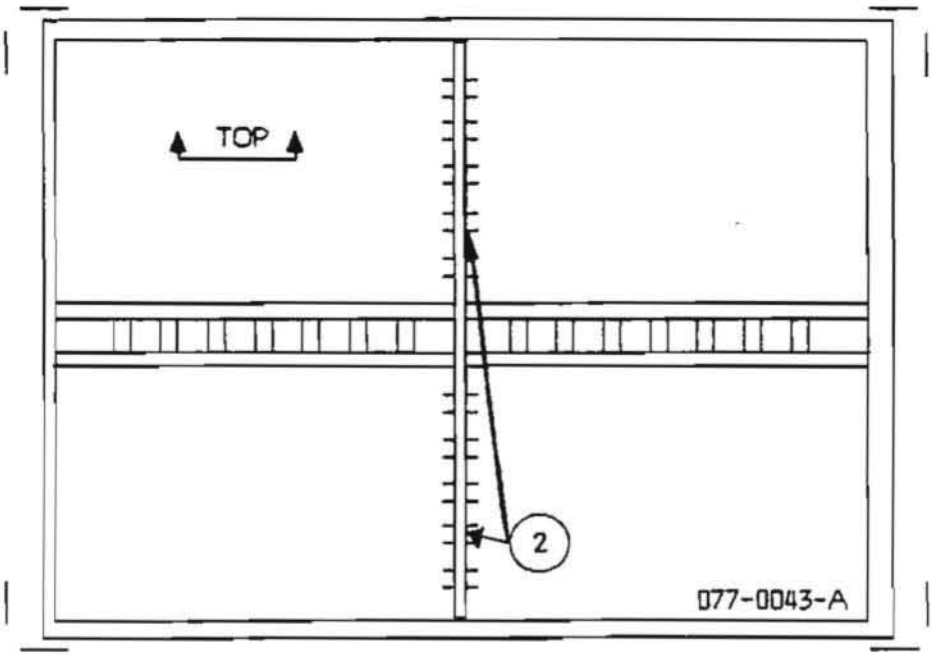

Figure 3

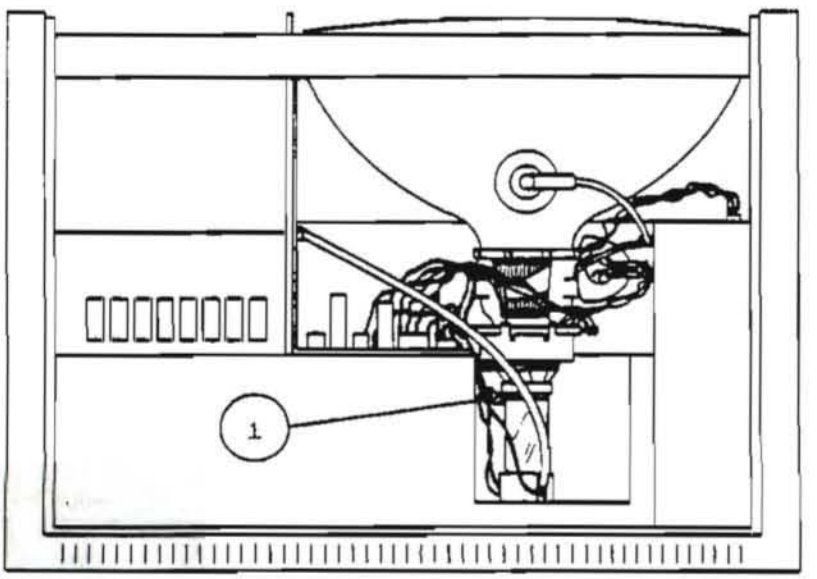

Figure 4

E. YOKE ADJUSTMENT

The yoke controls the orientation of the picture on the screen: if you rotate the yoke, the entire picture rotates around its center. (Turning the yoke does not affect the shape or focus of the picture, only its orientation.) If the central vertical line of the crosshatch pattern is not parallel to the central vertical line of the graticule (see Figure 3, #2), adjust the yoke as follows.

1. Remove all metallic objects (including your wedding ring, your watch, and any jewelry) from your hands and arms. Put on the safety goggles to protect your eyes. Keep one hand in your pocket or behind your back during these adjustments.

2. With a medium or small flatblade screwdriver, carefully loosen the yoke clamp screw (Figure 4, #1). Rotate the yoke by gripping it **only on the plastic section near the centering rings**, until the center vertical of the crosshatch is parallel to the center vertical on the graticule.

3. Make sure the yoke is pushed fully forward on the CRT neck; then carefully tighten the screw on the yoke clamp: it should be tight enough to prevent the yoke from turning, but not so tight as to crack the tube.

   IMPORTANT: If the yoke is not pushed fully forward, the vertical and horizontal lines of the crosshatch pattern will not be perpendicular to each other.

F. HEIGHT, WIDTH, VERTICAL LINEARITY, AND CENTERING

NOTE: Height and width specifications are different for a Modified Lisa 2/Macintosh XL. Refer to **Upgrade and Retrofit, Section 4** to perform height and width adjustments on a Modified Lisa 2/Macintosh XL.

By adjusting the video board Height, Width, and Vertical Linearity trimpots, along with the centering rings, you should be able to make the crosshatch pattern fit within the graticule's tolerance markings. You may notice curves or bends in the lines of the pattern; don't worry about them at this point. You can correct them later by adding small magnets to the yoke collar (see next section).

1. Adjust the yoke and centering rings until the central vertical line on the video crosshatch is parallel to the central vertical line on the graticule, and within the tolerance markings.

2. Adjust the Width trimpot until the left and right borders are within graticule tolerance.

3. Recenter the picture using the rings and yoke, if necessary; use the central vertical line as your guide.

4. Adjust the Height trimpot until the upper and lower borders of the picture are within graticule tolerance. Readjust the width and recenter the picture if necessary.

   NOTE: You will probably see some slight distortion at the upper and lower right corners. Don't worry about this; you will correct for it later.

5. Check the height, width, centering and orientation of the picture against the graticule again. Repeat steps 1-4 if necessary.

6. Adjust the Vertical Linearity trimpot until the horizontal lines of the crosshatch pattern are evenly spaced and within graticule tolerance.

7. Readjust the height and recenter the picture if necessary. Then recheck the vertical linearity and readjust that trimpot if necessary. Then recheck height and centering.... et cetera. These controls affect each other, so they must be adjusted and readjusted in this way.

8. Rest your eyes for a moment. Then inspect the picture again. Readjust if necessary.

9. If you see bent or distorted lines in the crosshatch pattern, adjust the magnets on the yoke (see next section). If not, put a small drop of the specified glue on the rings and one on each trimpot, to hold them in place. Be careful not to cover up the name of the trimpot or the resistor number (e.g., R34, R22).

G. MAGNET ADJUSTMENTS

After adjusting the picture as well as you can with the trimpots and rings, examine the crosshatch pattern for any distortions: curves or bends in the lines can be corrected by placing magnets around the yoke.

The magnets come in four strengths, according to the following color code:

yellow	=	5 gauss
red	=	7 gauss
blue	=	11 gauss
green	=	15 gauss

1. On yokes with spokes, simply place the magnet on the appropriate spoke and turn the magnet until the distortion is corrected. If your weakest magnet is too strong for the correction you need, cut pieces off it with the dikes until it is the proper strength.

   To apply magnets on spokeless yokes, put a small piece of magnet in a wad of Funtak. Find the spot on the yoke corresponding to the distorted area of the crosshatch, and stick the magnet on.

   NOTE: To apply magnets to the bottom of the yoke, you may need to rotate the yoke so that the area is accessible. To do this, loosen the yoke collar screw and rotate the yoke as far as necessary. When finished, rotate the yoke back to normal position and retighten the screw.

2. Once you have adjusted the magnets, use a drop of the specified glue to hold each in place. Then recheck the trimpot adjustments. When you are satisfied with the adjustments, put a small drop of the specified glue on the rings and one on each trimpot. Be careful not to cover up the name of the trimpot or the resistor number (e.g. R34, R22).

H. FINISHING UP

Turn off the Lisa. Let it sit in your shop overnight, to give the glue time to dry. In the morning, turn it on, let it warm up for 10 to 15 minutes, and check it against the alignment graticule to make sure that the adjustments have held. If there are no problems, turn off the Lisa, remove the alignment graticule, replace the customer's glare filter (if there was one), and return the Lisa to the customer.

Lisa/Macintosh XL Technical Procedures

Section 5

Diagnostics

Contents:

Vital Information.....5.2
Interpreting the Boot ROM and I/O ROM.....5.2.1
Using the Diagnostic Diskettes.....5.3
Booting the Diagnostic Diskette.....5.3
Customer Level.....5.4
Service Level.....5.5
  Running Individual Tests.....5.6
  Brief Test Descriptions.....5.7
  Run System Check.....5.8
  Set Diagnostic Controls.....5.8

VITAL INFORMATION

The Lisa/Macintosh XL has two diagnostic test series available for Level I service: **the boot ROM** and the **diagnostic test diskette.** The boot ROM on the CPU board acts as the first test of the Lisa 2/Macintosh XL system. It contains diagnostics that are executed each time the system is turned on.

The Lisa/Macintosh XL Test diagnostic diskette is used for testing Lisa 2, Lisa 2/5, and those Macintosh XL's (Lisa 2/10's) that have not been upgraded with the Macintosh XL Screen Modification Kit. It will not work on a system that has been upgraded with the Screen Modification Kit.

The Macintosh XL Screen Modification Kit diagnostic diskette is an identical test for use in testing Modified Lisa/Macintosh XL's (Lisa 2/10's) that have been upgraded with the Screen Modification Kit. It will not work on a system without that modification.

Both diagnostic diskettes contain tests for the CPU, memory boards, I/O board, diskette drive, built-in hard disk, ProFile, and expansion cards, as well as tools for video adjustments (the video grid and gray screen).

Both the modified and unmodified Lisa/Macintosh XL require two memory boards in order to use the diagnostic diskette.

INTERPRETING THE BOOT ROM AND I/O ROM

Upon power up, the Lisa/Macintosh XL will automatically perform a self-test using the program in its boot ROM. As the CRT warms up (approximately 30 seconds after power-up), the monitor will display four icons representing the CPU, I/O, memory, and expansion cards as they are being tested. Each icon will be highlighted in sequence as the boot ROM checks it.

The Boot ROM and I/O ROM code numbers are displayed at the upper right corner of the screen once the board icons have been tested. These ROM code numbers are displayed for only a few seconds, so it is important that you watch the upper right corner of the screen until you can record the code numbers for the Boot ROM and I/O ROM. The correct ROM code numbers for unmodified Lisa/Macintosh XL and Modified Lisa/Macintosh XL are listed on the table below. **If the numbers you record do not match the numbers given on the table, install the correct ROM immediately.**

	Unmodified		Modified	
	Boot ROM	I/O ROM	Boot ROM	I/O ROM
Lisa 2 and 2/5	H	A8	3A	A8
Macintosh XL	H	88	3A	88

The boot ROM diagnostics are an overview of the system. If one of the cards is faulty, its icon will be presented on the screen with an "X" through it. The testing will stop. Upon failure you should reseat the board, power-up, and if you get that error message again, swap out the board. If the system passes, and the ROM code numbers are correct, you can use the Lisa/Macintosh XL Test diagnostic (for unmodified system) or Macintosh XL Screen Modification Kit diagnostic (for modified system) for further testing.

THE FOLLOWING PROCEDURES ARE WRITTEN FOR THE LISA/MACINTOSH XL TEST DIAGNOSTIC (P/N 077-0140), AND FOR THE MACINTOSH XL SCREEN MODIFICATION KIT DIAGNOSTIC (P/N 077-0206).

USING THE DIAGNOSTIC DISKETTES

The Lisa/Macintosh XL Test and Macintosh XL Screen Modification Kit diagnostic can be used in two ways, in the "Customer Level" or the "Service Level." Customer Level allows you to set up and run a continuous sequence of tests. In Service Level you can choose to test individual modules. When you boot up either diagnostic diskette you are in the Customer Level. To enter the Service Level, hold down the **<APPLE>** and **<SHIFT>** keys and press **S.** You can enter Service Level before running the first Customer Level test.

Here are some important things to remember about using the diagnostic diskettes.

1. First determine whether the system to be tested is a modified Macintosh XL (with Screen Kit installed) or not. (See "Interpreting the Boot ROM and I/O ROM.") Be sure to use the appropriate diagnostic diskette.

2. In order to use the diagnostic diskette, the computer must have two memory boards.

3. If you attempt to use the diagnostic while any application is running, the computer will display a "damaged diskette" error message.

4. The diagnostic diskette will report an I/O error if the CPU board boot ROM are prior to rev. F. It is recommended that such boards be upgrade to the latest rev.

BOOTING THE DIAGNOSTIC DISKETTE

1. Make sure the diagnostic diskette is not write protected.

2. If the computer is turned on, turn it off by pressing the on-off button once.

3. Insert the proper diagnostic diskette.

4. Power up the computer. When you hear the first click (when the four boot ROM icons are on the screen but have not yet all been checked off) hold down the **<APPLE>** key and press **2** on the alphanumeric keyboard.

   After completing its self-test, the computer will read the diskette. You are then presented with a series of menu screens offering several options for the configuration of the test sequence.

CUSTOMER LEVEL

The first screen you see after starting up from the test diskette is part of the "Customer Level" of the test program. Use Customer Level to run a continuous test of the Lisa or Lisa/Macintosh XL system. You can choose either a "Short" or an "Overnight" (long) test sequence. (The overnight test is preferable for intermittent problems.) You can also choose to test the disk drive, the built-in hard disk (for Lisa 2/10), and the ProFile. To make these choices, select the appropriate decision box using the mouse.

If you abort a test early (i.e., hold down the "APPLE" key and press the main keyboard's ".") you will be given the options "Continue", "Summary", or "Turn Off".

"Continue" proceeds with the testing of the next module in the sequence.

"Summary" lists the modules tested and whether they passed or failed.

If you want to test individual modules one at a time, see the instructions for "Service Level" on the next page.

SERVICE LEVEL

Use the "Service Level" to run tests of individual modules. This is useful when you have some idea where in the system the problem may be located. From the Service Level you can also set diagnostic controls and run a system check.

To enter the Service Level from the first screen after startup, hold down the "APPLE" and "SHIFT" keys and press "S". Then, to see the Options menu, pull it down with the mouse or press any key on the keyboard. The choices listed in the Options menu are defined below:

a) **Check** - to run individual tests.

b) **Run System Check** - to enter the first menu of the Customer Level.

c) **Eject Diskette** - to eject Lisa/Macintosh Test.

d) **Set Diagnostic Controls** - to set testing modes and error controls.

e) **Set Customer Level** - to get out of the Service Level.

f) **Turn Off** - to turn off the computer.

Service Level lets you use either mouse or keyboard input. To use the keyboard, hold down the "APPLE" key while pressing the letter or number indicated at the right of the option you want to select.

NOTE: AFTER THE LISA/MACINTOSH XL TEST DISKETTES VERIFY THAT THE SYSTEM IS GOOD, RUN A FUNCTIONAL TEST BY:

a. BOOTING THE LISA OFFICE SYSTEM AND RUNNING ANY OFFICE SYSTEM APPLICATION (FOR A LISA)

OR

b. BOOTING UP A MACWORKS DISKETTE AND RUNNING A MACINTOSH APPLICATION (FOR A MACINTOSH XL).

Running Individual Tests

1. Select "Check" from the Options menu.

   Lisa or Macintosh XL now displays the icons for the diagnostics.

2. Selecting the test. (See **Brief Test Descriptions** for specific tests and additional instructions on how to run them.)

   a) Select the icon for the test you are interested in by moving the pointer over the icon, and pressing the mouse button **once.**

   b) Select "OK." (Selecting "Cancel" would return you to Options.)

3. Test results are displayed either as an icon with a check by it, indicating the module passed, or as an error message suggesting which modules may be at fault and the order in which to swap them.

   The "Gray" and "Crosshatch" tests are use for video adjustments. When either of these icons is selected, the Lisa displays the corresponding pattern. You must push the mouse button to return to the Options menu.

4. To return to the "Check" menu to continue testing, select "OK" from the results screen and then select "OK" from the subsequent Note. To see the Options menu use the mouse to pull it down or press any key on the keyboard.

   NOTE: Results from previous tests may be displayed on the screen while you are returning to the Options menu. Don't be confused. Ignore this and follow the above instructions to return to the "Check" menu.

Brief Test Descriptions

Below are brief explanations of what each diagnostic examines and instructions that help clarify its use.

CPU verifies the logic on the CPU: the operation of the boot ROM, the memory management unit of the CPU board, the video timing circuitry, and the error logic.

MEMORY tests all the RAM chips in both memory boards. The memory board test takes about sixteen minutes, so have patience. This test does not destroy any memory data.

IO BOARD test verifies the operation of the Clock/Calendar, versatile interface adaptor, and diskette controller logic. While this test is running, do not move the mouse or press any keys on the keyboard.

DISKETTE DRIVE test verifies the operation of the disk drive, testing that certain parameters are within specifications (e.g., the motor speed). It also verifies the diskette drive operation with a complete nondestructive diskette surface test. This test takes a while, so have patience.

GRAY can be used for video adjustments.

CROSSHATCH is used for video adjustments. (See Section 4, "Lisa Video Adjustments," in the Lisa Technical Procedures.)

BUILT-IN HARD DISK test scans the entire data surface, checking for bad blocks. This test lasts about five minutes and is nondestructive.

PARALLEL INTERFACE CARD tests the first parallel interface card that is installed in an expansion slot (scanning for a card from innermost to outermost slot).

PROFILE test verifies the Lisa/Macintosh XL - ProFile communication and the RAM buffer; it also checks the status block and does a block scan.

Run System Check

You would use this selection if you had no idea what was causing an error and therefore wanted to run a test sequence.

-- To run this test, select "Run Complete System Check" from the Options menu.

   You are then presented with the same series of menu screens offered in the Customer Level. These include several options about how you want the test sequence to run. You can choose either a short or long (overnight) test sequence. The long test is preferable for intermittent problems. You are also given the choice of testing or not testing the disk drives. To make these choices, select the appropriate decision box using the mouse.

   If you abort a test early (hold down the "APPLE" key and press "."), you are given the options "Continue" or "Turn Off". "Continue" allows you to make further selections from the Options menu.

Set Diagnostic Controls

Here you can change how a test is run, that is, once or continuously. You would select "continuously" to find intermittent errors.

1. Select Set Diagnostic Controls from the Options menu.

   The defaults are numbers 1, 3, 5, 8, and 9.

2. To change a default setting select the box to the left of your choice.

3. To cancel changes select "Cancel". To accept changes select "OK".

Lisa 2/Macintosh XL Technical Procedures

Section 6

Troubleshooting

Contents:

How to Use This Section.....6.3
Basic Lisa 2/Macintosh XL Configuration Table.....6.4
System Boards Compatibility Table.....6.6
Primary Troubleshooting Flowchart.....6.8
Symptom/Cure Procedures and Tables
  Power Repair Procedures.....6.11
  Startup Repair and Error Tones.....6.12
  Startup Error Icons.....6.14
  Startup Error Codes.....6.16
  "Sad Macintosh" Error Codes.....6.20
  System Hang Procedures.....6.21
  Video Problems.....6.22
  MicroDisk Drive Problems.....6.28
  Hard Disk Operating Systems (Environments).....6.30
  Hard Disk Problems.....6.32
    How to Repair Crashed Disk (MacWorks).....6.32
    How to Repair a Crashed Disk (Lisa Office System)....6.33
    ProFile Symptom/Cure Table.....6.34
    Internal Hard Disk Symptom/Cure Table.....6.35
  Mouse Problems.....6.36
  Keyboard Problems.....6.37
  Noise Problems.....6.38
  Transmitting/Receiving Repair Procedure.....6.39
Appendix A: MacWorks/Lisa Office System Error Messages...6.40
Appendix B: Operating System Error Messages.....6.48
            Operating System Error Codes.....6.58

HOW TO USE THIS SECTION

To use this section most efficiently:

1. Review the **Basic Lisa 2/Macintosh XL Configuration Table** to determine which configuration of Lisa 2/Macintosh XL you are working with. This table provides the names of systems and lists basic hardware components required. It also contains information about the programs and devices each system is capable of running.

2. If you have an idea where the problem lies, use the appropriate symptom/cure procedure or table to solve the problem. If you have no idea what the problem is, or if using the symptom/cure table did not provide a fix, start by following the **Primary Troubleshooting Flowchart.**

3. When checking or replacing system boards or ROM, use the **System Boards Compatibility Table** to make sure that system boards and firmware match the particular Lisa 2/Macintosh XL configuration you are working on.

Basic Lisa 2/Macintosh XL Configuration Table

The top row of the table (across) lists the system names for the three basic configurations of the Lisa 2/Macintosh XL. The first column (down) lists the names of basic hardware components. The "YES" or "NO" listed under each system indicates whether the hardware component is or is not a required part of that system. The "Notes" provide important information about software compatibility and hardware configuration for each system.

The pictures below show each basic system as it is listed in the top row of the table.

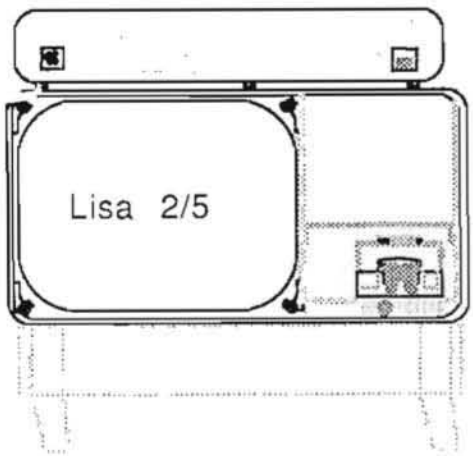

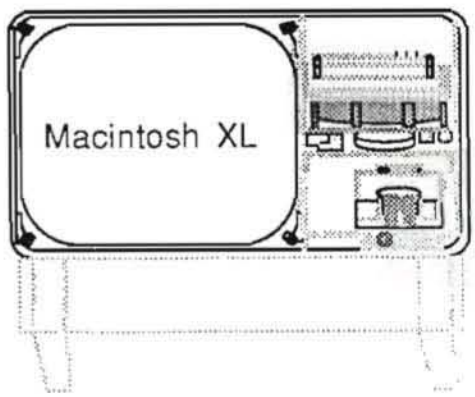

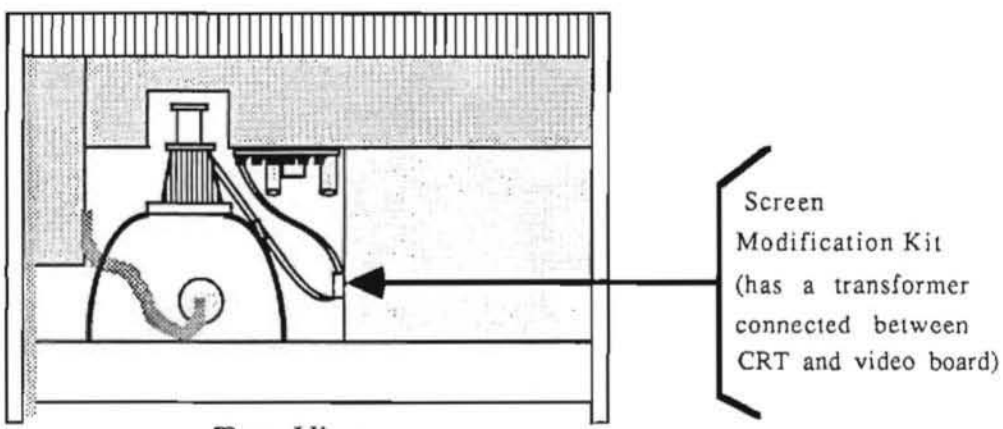

Top View

Modified Macintosh XL or Modified Lisa 2

BASIC LISA 2/MACINTOSH XL CONFIGURATION TABLE

SYSTEMS: / BASIC FEATURES	LISA 2 (Lisa 2/5 if connected to ProFile)	MACINTOSH XL (LISA 2/10)	MODIFIED MACINTOSH XL (Screen Modification Kit Installed)
Internal Hard Disk Present:	NO	YES	YES
Notes:	Runs Lisa 7/7 Office and/or MacWorks if ProFile is connected	Runs Lisa 7/7 Office and/or MacWorks.	Runs MacWorks only.
MicroDisk Drive Present:	YES	YES	
Notes:	Requires Lisa Drive Adapter board (inside disk drive chamber).		
Built-in Parallel Port Present:	YES	NO	NO
Notes:	Can connect ProFile or other parallel device to motherboard. MacWorks and/or Lisa 7/7 Office System can be installed on a connected ProFile. The parallel port is a horizontal DB-25 connector located next to the mouse port.	Must install parallel interface card in expansion chamber to access parallel device. When using Lisa 7/7 Office System, internal hard disk can access ProFile and other parallel devices. When using MacWorks, internal hard disk cannot access ProFile but can access parallel printer if driver is installed.	Must install parallel interface card in expansion chamber to access parallel device. Internal hard disk runs MacWorks only: cannot access ProFile while using MacWorks, but can access parallel printer if driver is installed.
Two Built-in Serial Ports Present:	YES	YES	
Notes:	Has Three DB-25 connectors in back.	Only two DB-25 connectors in back	
8 Amp Power Supply rated at 1.2 amps AC Present:	YES	NO	
10 Amp Power Supply rated at 1.8 amps AC Present:	NO	YES	

System Boards Compatibility Table

The top row of the table (across) lists the system names for three basic configurations of Lisa 2/Macintosh XL. The first column (down) lists the boards contained in the card cage and video chamber. The boxes under each system list the engineering number (printed near the edges on each board) and the Apple part number for each system board. The part numbers and revision levels for ROM on the CPU and I/O boards are included. The ROM identification codes listed are the code numbers that will be displayed on the screen during the startup self-test (see **Section 5, Diagnostics**, "Interpreting the Boot ROM and I/O ROM").

When inspecting or replacing system boards, use the **System Boards Compatibility Table** to make sure boards and ROM (part numbers and rev. level) match the system you are working on.

NOTE: Any number can be in place of the "X" in the engineering numbers listed on the table.

NOTE: Refer to the **Module Identification Manual** for pictures and Apple part numbers of the system boards.

SYSTEM BOARDS COMPATIBILITY TABLE

SYSTEMS: / SYSTEM BOARDS	LISA 2 (Lisa 2/5 if connected to ProFile)	MACINTOSH XL (LISA 2/10)	MODIFIED MACINTOSH XL (Screen Modification Kit Installed)	MODIFIED LISA 2 (Screen Modification Installed and an External 5 or 10 megabyte ProFile)
Motherboard		Same for Macintosh XL and Modified Macintosh XL		
BOARD ENGINEERING #:	620-0108-X	620-X141		620-0108-X
APPLE P/N:	661-93106	661-93170		661-93106
NOTES:	Has three DB-25 connectors: two serial, one parallel	1. No parallel connector 2. Has total of 2 DB-25 connectors, both serial		Has three DB-25 connectors, two serial, one parallel
I/O Board		Same for Macintosh XL and Modified Macintosh XL		
BOARD ENGINEERING #:	620-0117-X	620-X142-X		620-0117-X
APPLE P/N:	661-93198	661-93171		661-93198
DISK CONTROLLER ROM:	P/N 341-0290	P/N 341-0281		P/N 341-0290
LOCATION:	1-A	2-A		1-A
REV:	B	D		B
ROM ID CODE:	A8	88		A8
NOTES:	1. Resistor at R-47 IS NOT present 2. Has batteries	1. Resistor at R-47 IS present 2. No batteries		1. Resistor at R-47 IS NOT present 2. Has batteries
CPU Board	Same for Lisa 2 and Macintosh XL		Same for Modified Macintosh XL and Modified Lisa 2	
BOARD ENGINEERING #:	620-0119-X		620-0119-X	
APPLE P/N:	661-93103		661-0298 or 661-93103	
BOOT ROMs:	P/N 341-0175 and 341-0176		P/N 341-0347 and 341-0346	
REV & ID CODE:	H H		3A 3A	
LOCATION:	13-D 14-D		13-D 14-D	
SERIALIZED ROM (VIDEO STATE ROM):	P/N 620-0003		P/N 341-0348	
NOTES:	1. Serialized ROM must be transferred to the customer's replacement CPU board. 2. Macintosh XL (Lisa 2/10) CPU board can be used in Modified Macintosh XL provided the correct Boot ROMs and Serialized ROM are installed.			
Memory Boards (two identical)	Same for Lisa 2 , Macintosh XL, Modified Macintosh XL, and Modified Lisa 2			
BOARD ENGINEERING #:	620-01XX-X			
APPLE P/N:	661-93105			
Video Board	Same for Lisa 2 , Macintosh XL, Modified Macintosh XL, and Modified Lisa 2			
BOARD ENGINEERING #:	620-0121-X			
APPLE P/N:	661-93107			

PRIMARY TROUBLESHOOTING FLOWCHART

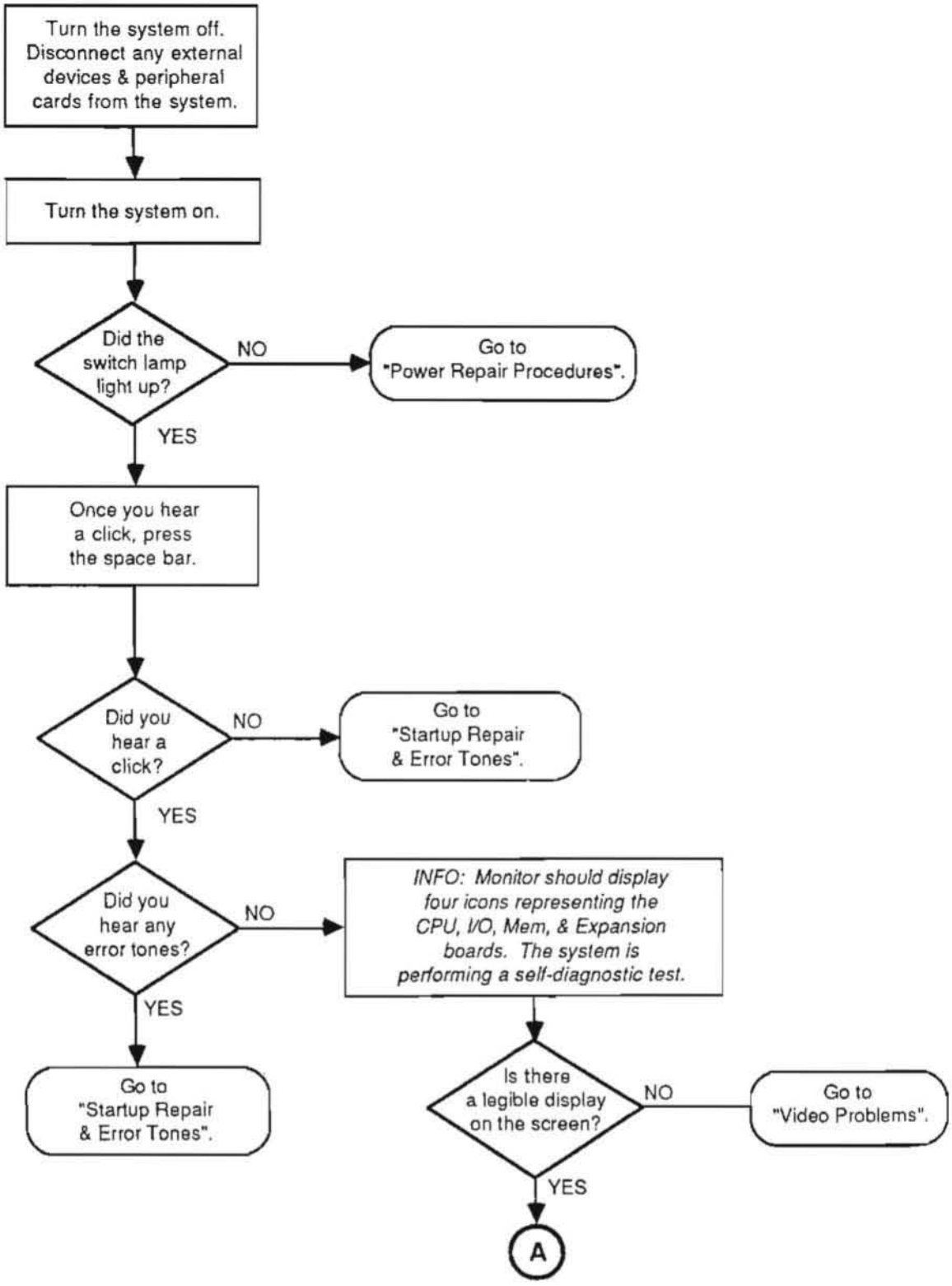

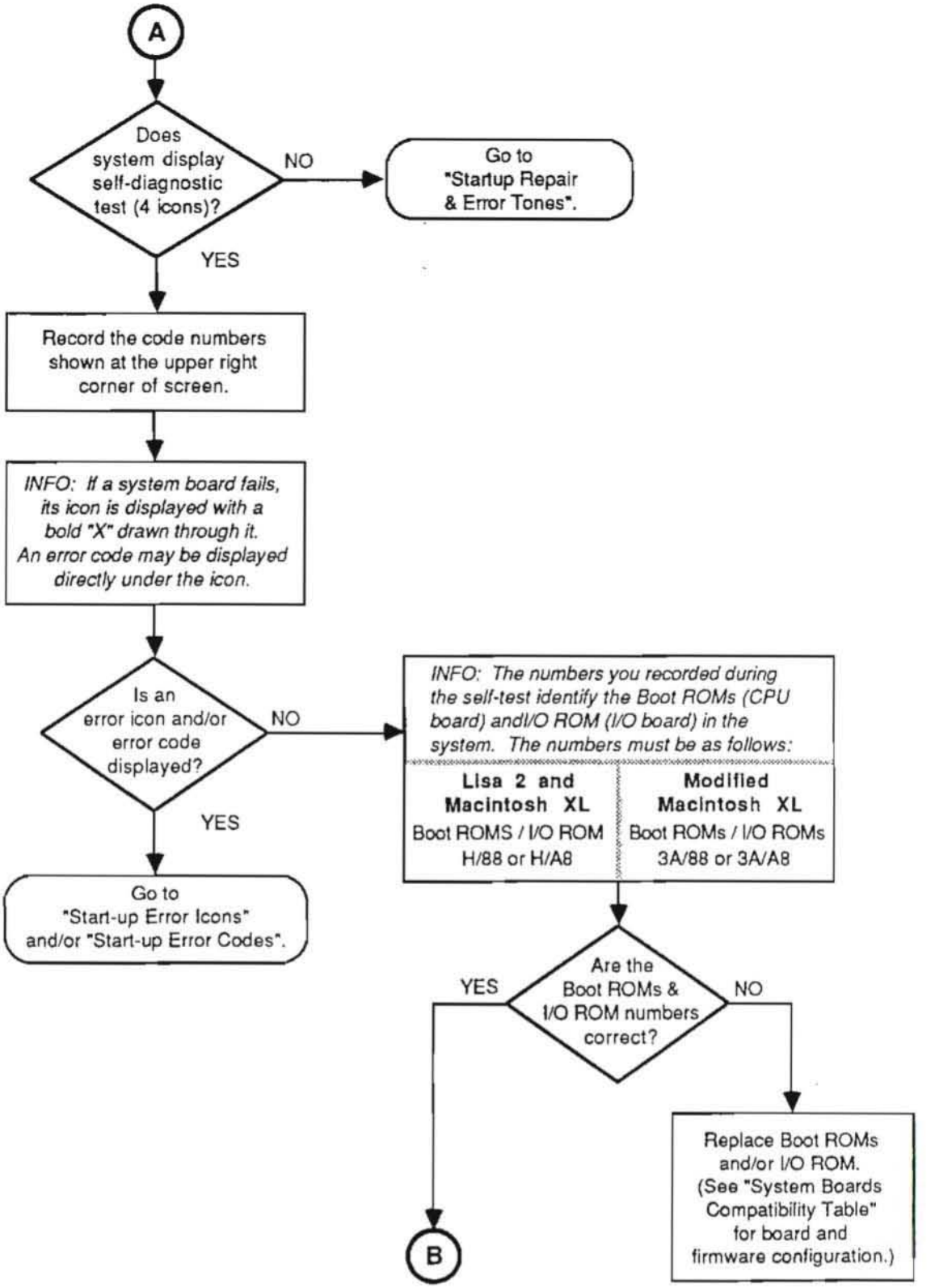
A
Does system display self-diagnostic test (4 icons)?
NO
Go to "Startup Repair & Error Tones".
YES
Record the code numbers shown at the upper right corner of screen.
INFO: If a system board fails, its icon is displayed with a bold "X" drawn through it. An error code may be displayed directly under the icon.
Is an error icon and/or error code displayed?
NO
YES
Go to "Start-up Error Icons" and/or "Start-up Error Codes".
INFO: The numbers you recorded during the self-test identify the Boot ROMs (CPU board) and I/O ROM (I/O board) in the system. The numbers must be as follows:
Lisa 2 and Macintosh XL
Boot ROMS / I/O ROM H/88 or H/A8
Modified Macintosh XL
Boot ROMs / I/O ROMs 3A/88 or 3A/A8
Are the Boot ROMs & I/O ROM numbers correct?
YES
NO
Replace Boot ROMs and/or I/O ROM. (See "System Boards Compatibility Table" for board and firmware configuration.)
B

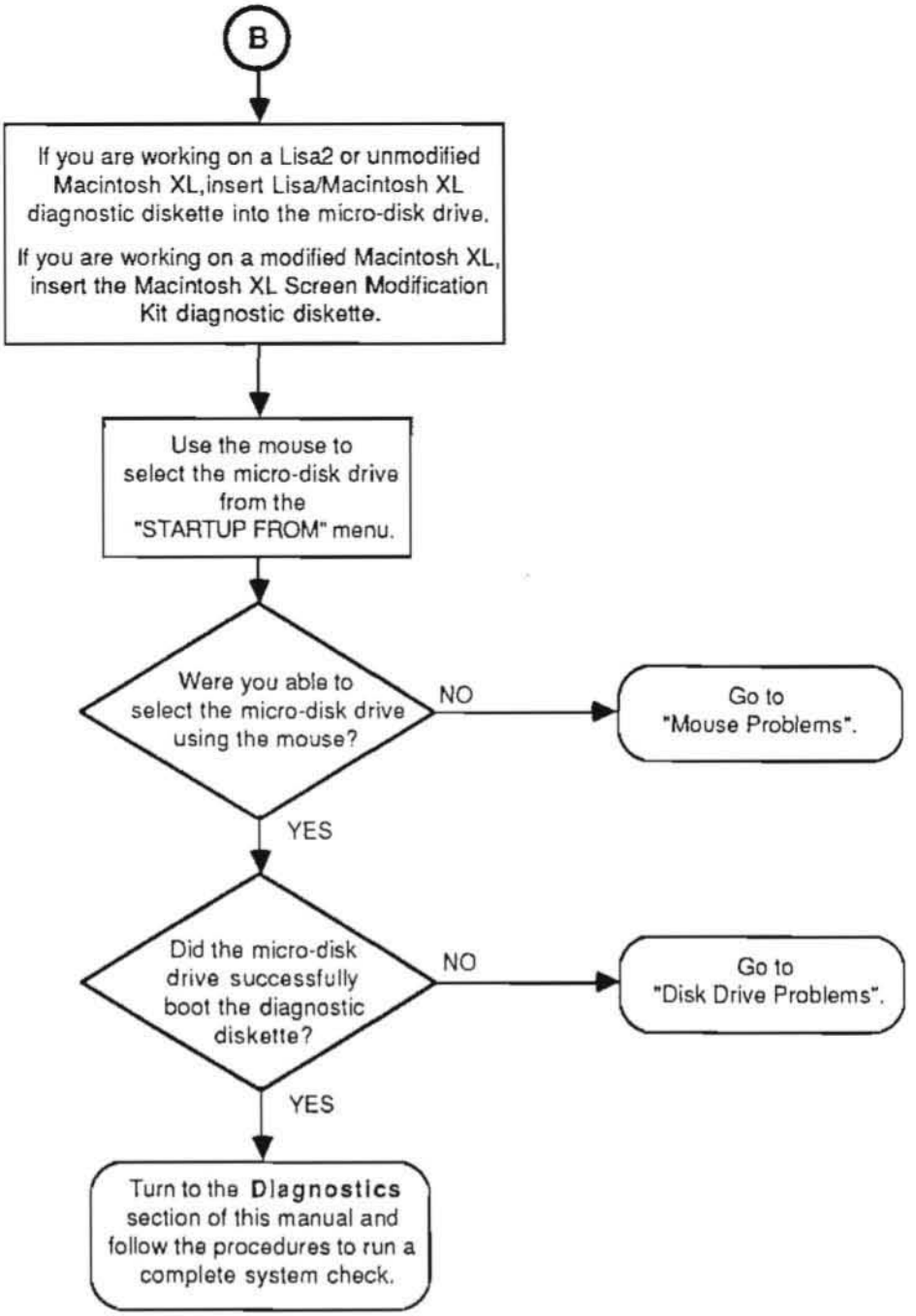

IMPORTANT: When you are sure that the system is functioning properly, reconnect any external devices and peripheral cards & follow the procedures in the ***Diagnostics*** *section to test peripherals.*

SYMPTOM/CURE PROCEDURES AND TABLES

Power Repair Procedures

If the system does not come on when you press the on-off button, follow the steps listed below to repair it. Try turning the system on after each step.

1. Make sure that the AC cord is secure at the back of the system and in the wall outlet.

2. Swap the AC cord.

3. Make sure that the front and back panels are installed securely so that the interlock switches are active.

4. Make sure that the softswitch/keyboard assembly is connected to the motherboard.

    a. Remove the front and rear panels.

    b. Remove the top.

    c. Slide the disk drive assembly out far enough to let you see the softswitch assembly card located in the well behind the disk drive assembly. If it is not connected, connect it.

5. Swap out modules in the following order:

    a. power supply
    b. I/O board
    c. softswitch/keyboard assembly
    d. front interlock switch
    e. disk-drive-to-card-cage connector
    f. motherboard
    g. video board

Startup Repair and Error Tones

NOTE: Prior to using the charts in this section, you must remove all external devices and peripheral cards attached to the system. Then turn the system back on and see if it works. If not, try pushing the reset button in back. If the problem remains, proceed to the Symptom/Cure table below.

Identify the "Symptom," and then follow the steps in the order in which they are listed under "Cure". Turn on the system after each step. Once the system works, reconnect the external devices, one at a time, turning on the system after each replacement.

SYMPTOM	CURE
Incorrect or no video, no "clicks", no error tones	- Check **System Boards Compatibility Table** to make sure correct CPU board and ROM are installed - Replace boot ROM - Replace CPU board - Go to **Video Problems** - Replace motherboard
No "clicks", but no problems found during self diagnostic test (no error codes or icons)	- Check speaker connection - Replace I/O board - Replace speaker
"Clicks" are heard, but incorrect or no video, no error tones	- Check **System Boards Compatibility Table** to make sure correct CPU board and ROM are installed - Replace CPU board - Go to **Video Problems**

SYMPTOM	CURE
Error tones with incorrect or no video	- Use **System Boards Compatibility Table** to make sure the system has correct boards and firmware before replacing the following modules:
Lo	- CPU board - Memory board 1 - Memory board 2
Lo, Lo	- Memory board 2 - CPU board
Lo, Hi	- System Boards (Swap out one at a time)
Lo, Lo, Hi	- CPU board
Lo, Hi, Lo	- I/O board
Hi, Hi, Hi	- Expansion cards
Lo, Hi, Hi	- Memory board 1 - Memory board 2
Hi, Lo, Lo	- Expansion cards - Motherboard
Hi, Lo, Hi	- Keyboard
Hi, Hi, Lo	- Keyboard or Mouse not connected

STARTUP ERROR ICONS

Identify the Icon indicated on the display, then follow the steps in the order in which they are listed in the "Cure" column.

Use the **System Boards Compatibility Table** to make sure that system (card cage) boards and firmware match the particular Lisa 2/Macintosh XL configuration you are working on.

ICON	MODULE AND OTHER POSSIBLE REPLACEMENTS
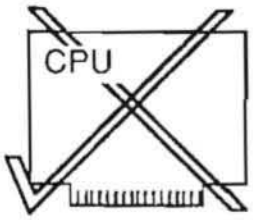	1. Check for obsolete ROM on CPU board (See "System Boards Compatibility Table" 2. Reseat CPU board 3. Replace Boot Roms (CPU board) 4. Replace CPU board 5. Replace motherboard
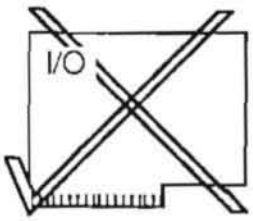	1. Check for obsolete ROM on I/O board (see "System Boards Compatibility Table") 2. Reseat I/O board 3. Replace I/O board 4. Replace Motherboard
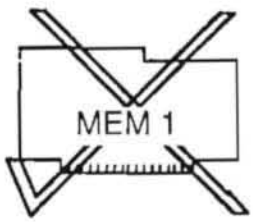	1. Reseat memory board indicated 2. Replace Memory board 1 3. Replace Memory board 2 4. Replace Motherboard
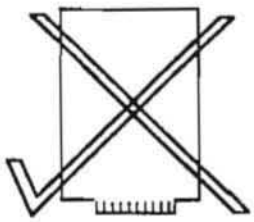	1. Reseat expansion card 2. Try card in another slot 3. Replace expansion card

ICON	MODULE AND OTHER POSSIBLE REPLACEMENTS
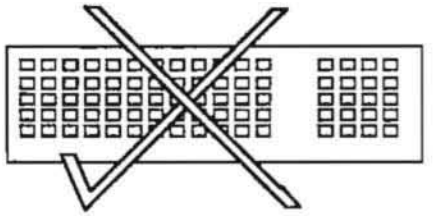	1. Replace Keyboard
	1. See "Hard Disk Problems" Problems" to repair the hard disk 2. Replace internal hard disk
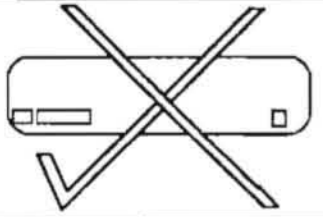	1. See "ProFile Problems" 2. Replace ProFile cable 3. Replace Profile 4. Replace I/O board 5. Replace motherboard
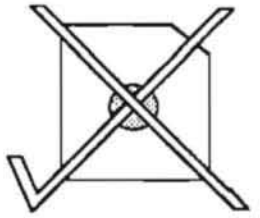	1. Try another diskette 2. Replace microdisk drive
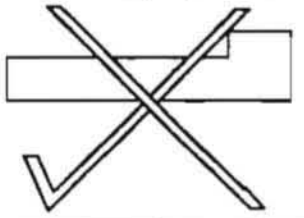	1. Replace Lisa Lite Adaptor if using Lisa 2/5 2. Replace I/O board 3. Replace micro-disk drive

STARTUP ERROR CODES

Locate the number that matches the error number on the display. Then follow the steps and/or replace the modules in the order in which they are listed in the "Cure" column to repair the system.

Use the **System Boards Compatibility Table** to make sure that system (card cage) boards and firmware match the particular Lisa 2/Macintosh XL configuration you are working on.

NUMBER	PROBLEM	CURE
22	Unable to clamp diskette	- Refer to **Appendix A**
23	Unable to read diskette	"
25	Unable to unclamp diskette	"
38	No boot file on diskette	"
39	Disk controller timeout	- I/O board - CPU board - Motherboard
40	MMU	- CPU board
41	CPU selection logic	- CPU board
42	Video circuitry	- CPU board
43	Parity circuitry	- CPU board - Memory board 1 - Memory board 2 - Motherboard

NUMBER	PROBLEM	CURE
44	NMI error	- CPU board - I/O board - Motherboard
45	BUS error	- I/O board - CPU board - Motherboard
46	Address error	- CPU board - Memory board 1 - Memory board 2
47	Exception	- CPU board - Motherboard
48	Illegal instruction	- CPU board - Memory board 1 - Memory board 2
49	1010 or 1111 trap	- CPU board - Memory board 1 - Memory board 2
50	COPs VIA	- I/O board - CPU board - Motherboard
51	Parallel Ports VIA	- I/O board - CPU board - Motherboard
52	I/O board COPs	- I/O board

NUMBER	PROBLEM	CURE
53	Keyboard COPs	- Keyboard - I/O board - Keyboard cable - Motherboard
54	Clock error	- I/O board
55	RS232 Port A	- I/O board - Motherboard
56	RS232 Port B	- I/O board - Motherboard
57	Disk controller	- I/O board - Lisa Drive Adaptor (Lisa 2 only) - MicroDisk Drive - Disk Drive cables - CPU board - Motherboard
58	I/O board access	- I/O board - CPU board - Motherboard
59	I/O board COPs code	- I/O board
60 - 69	I/O or Keyboard error	- Keyboard - I/O board - Motherboard
70 or 71	Memory data or Memory parity	- Replace memory board specified by error icon displayed

NUMBER	PROBLEM	CURE
75	Boot failure	- Refer to **Appendix A**
80 - 85	Hard disk errors	- Refer to **Appendix A**
90 - 93	Expansion card errors	- Expansion card - Motherboard

"SAD MACINTOSH" ERROR CODES

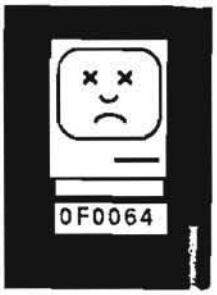

This icon appears on the Lisa 2/Macintosh XL when it is turned on and is not working (it can't read the disk, and won't start up). Sometimes a "Happy Macintosh" screen will appear, but before the "Welcome to Macintosh" screen can appear, a "Sad Macintosh" comes up.

A list of "Sad Macintosh" error codes and what they mean for the Lisa 2/Macintosh XL is not available at this time. If the system displays a "Sad Macintosh" error code, go to **Hard Disk Problems** and follow the procedures under "How To Repair a Crashed Disk."

SYSTEM HANG PROCEDURES

The system is said to "hang" when it ignores all input from the user. This condition is usually caused by software failures. When the system hangs, follow the steps below to try to save any open documents. **IT IS IMPORTANT TO FOLLOW THESE STEPS BEFORE SHUTTING THE SYSTEM DOWN.**

1. If the mouse is not working try installing another mouse.

2. Try alternative keyboard commands for saving documents. (See the manual for the software you are using.)

3. Try turning the system off by pressing the ON/OFF button once. This will usually trigger a series of verification and storage (save) functions.

   NOTE: If the above procedures do not work, you will not be able to recover whatever you were working on when the system failed.

4. Press the reset button located at the back of the system.

   If the system starts up normally, then you probably do not have a hardware problem. Check to make sure that the software you were using is compatible with (works with particular version of) the Startup environment (Lisa 7/7 or MacWorks). Use the **System Boards Compatibility Table** to make sure that system (card cage) boards and firmware match the particular Lisa 2/Macintosh XL configuration you are working on.

   If the system displays error tones, an error code, icon, or message, refer to the appropriate Symptom/Cure table to determine the problem.

   If the system still "hangs," unplug the system from the wall outlet, then plug it back in. Use the **Primary Troubleshooting Flowchart** procedure to get the system running. (See **Contents.**)

VIDEO PROBLEMS

WARNING: IF HAVE NOT BEEN TAUGHT HOW TO ADJUST AND REPLACE LISA 2/MACINTOSH XL VIDEO MODULES DO NOT ATTEMPT VIDEO REPAIRS.

Refer to **Section 3, Video Adjustments**, for instructions on the following adjustments.

When replacing boards or ROM, refer to the **System Boards Compatibility Table** to make sure that system (card cage) boards and firmware match the particular Lisa 2/Macintosh XL configuration you are working on.

NOTE: Whenever you replace the CPU board, be sure to transfer the customer's serialized ROM (Video State ROM) to the new board. If the customer's Video State ROM is bad, record the serial number of the system and call your TAC to order a new Video State ROM.

SYMPTOM	CURE
No display (no raster), power is on, no error tones or codes	- Adjust brightness pot in back - Check connections ** - Replace video board - Replace CPU board - Replace I/O board - Replace power supply - Replace CRT - Replace flyback - Replace screen modification kit * - Replace motherboard
Display not legible, no error tones	- Check **System Boards Compatibility Table** to make sure correct boards and ROM are installed - Replace boot ROM - Replace CPU board - Replace memory board 1 - Replace memory board 2 - Replace video board

* Applies to Modified Macintosh XL only.
** See notes at the end of this table.

SYMPTOM	CURE
Screen is blinking on and off, hear a continuous clicking sound	- Adjust brightness pot in back - Adjust contrast - Replace power supply - Replace video board - Replace flyback
CRT too bright or too dim	- Turn system off, then on, and adjust brightness and contrast pots
Unable to adjust brightness	- Replace power supply - Replace video board - Replace CRT - Replace CPU board
Unable to adjust contrast on video board	- Replace video board - Check connections ** - Replace CRT - Replace flyback - Replace CPU board - Replace power supply
Unable to adjust contrast via software	- Replace I/O board - Replace CPU board - Replace video board - Use diagnostic to check keyboard
Blurred screen	- Adjust focus pot in back
Unable to adjust focus	- Replace power supply - Replace video board - Check connections ** - Replace CRT - Replace flyback

* Applies to Modified Macintosh XL only.
** See notes at the end of this table.

SYMPTOM	CURE
Rolling screen	- Adjust vertical hold
Unable to adjust vertical hold (picture keeps rolling)	- Replace video board - Replace CPU board - Replace I/O board - Replace motherboard
Picture locked in wrong vertical position (picture begins or end in middle of screen)	- Replace CPU board - Replace video board - Adjust yoke - Check connections **
Picture too small (horizontally or vertically)	- Adjust height and width - Adjust brightness and contrast - Replace video board - Replace flyback
Unable to adjust height and/or width using video board pots	- Replace video board - Replace I/O board - Replace CPU board - Replace CRT
Dark or bright lines along side edges of screen	- Adjust horizontal phase
Unable to adjust horizontal phase	- Replace video board - Replace CPU board - Replace I/O board - Replace flyback - Replace CRT - Replace motherboard

* Applies to Modified Macintosh XL only.
** See notes at the end of this table.

SYMPTOM	CURE
Only a horizontal line appears on screen	- lower brightness and contrast - Replace video board - Replace CRT
Picture appears stretched or compressed vertically	- Adjust vertical linearity pot
Unable to adjust vertical linearity	- Replace video board - Replace CPU board - Replace I/O board - Replace flyback - Replace motherboard - Replace CRT
Scalloped picture (vertically compressed)	- Adjust video controls - Replace video board - Replace power supply - Adjust yoke - Replace flyback
Screen not centered or not straight	- Adjust yoke
Bad deflection	- Replace video board - Replace CRT
No horizontal stability (out of phase)	- Replace video board - Replace CPU board - Replace I/O board - Replace CRT

* Applies to Modified Macintosh XL only.
** See notes at the end of this table.

SYMPTOM	CURE
Double images	- Replace CPU board - Check connections **
Inverse video	- Replace CPU board
No video content, raster displays	- Replace CPU board - Replace I/O board - Replace video board - Check connections **
Burn spots on screen	- Replace CRT

* Applies to Modified Macintosh XL only.
** See notes at the end of this table.

NOTES

** To "check connections" follow the procedures below.

1. Turn off the system.
2. Unplug the power cord from the wall outlet.
3. Discharge the CRT.
4. Remove and reseat the video board.
5. Disconnect and reconnect the video board connectors.
6. Make sure that the ground strap that goes from the round yoke connector to the floor of the CRT cup is secure.
7. Make sure that the round yoke connector is securely connected to the CRT neck.
8. Remove and reseat the power supply.
9. Remove the card cage and reseat the card cage boards.
10. Replace the card cage.
11. Plug the AC cord back into the Lisa 2/Macintosh XL and into the wall outlet.

MICRODISK DRIVE PROBLEMS

NOTE: If the current disk drive problem is not described in the table below, use the troubleshooting flowchart at the end of this section to determine the problem.

SYMPTOM	CURE
Diskette is difficult or impossible to insert	- Make sure the arrow on the diskette is pointed toward the drive. - Try another disk - Replace disk drive
Disk drive will not eject diskette, mouse and keyboard work	- Check cable connections between the drive and motherboard - Replace I/O board - Remove the front cover and manually eject the the diskette, then follow the flowchart at the end of this section
System displays a bad disk icon and an error code	- Go to **Start-Up Error Icons**
System displays error message concerning disk drive.	- Go to **Appendix A**

Disk Drive Problems Flowchart

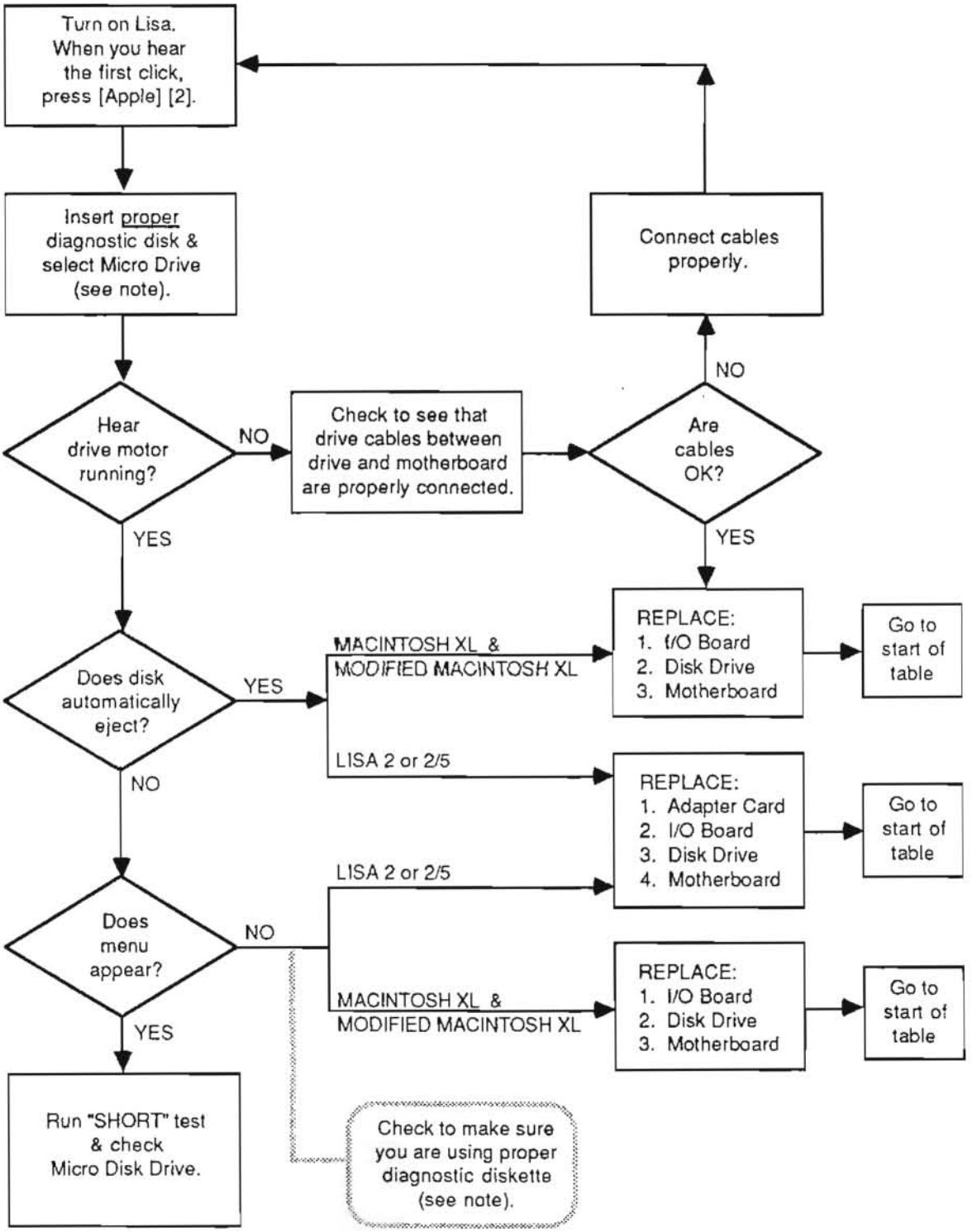

NOTE 1: For Modified Macintosh XL use Macintosh XL Screen Modification Kit Diagnostic. For Lisa2 and Macintosh XL, use the Lisa/Macintosh XL Test 3.0 Diagnostic diskette.

NOTE 2: Lisa must have two memory boards to use the Lisa Diagnostic diskette.

HARD DISK OPERATING SYSTEMS (ENVIRONMENTS)

In order to use any hard disk, some type of operating system (environment) must be installed on it. These environments allow you to use applications such as LisaDraw or MacDraw, depending upon which environment is installed. There are two environments that can be installed on the Macintosh XL (Lisa 2/10) internal hard disk: the Lisa Office System and MacWorks. You can install one or both of these environments on one internal hard disk. When a hard disk has two environments installed on it, it is called a "shared" hard disk. You can only access one environment at a time.

There is a different procedure for booting each portion (environment) of a shared hard disk. To boot the Macintosh environment on a shared hard disk, you must insert the MacWorks diskette into the microdisk drive and start up from the microdisk. To boot the Lisa Office System portion of a shared hard disk, simply turn the system on. If the hard disk is not sharing two different environments, then just turn the system on to boot whichever environment has been installed.

For the Lisa environment, the version of any application you are using should match the Office System version installed on the hard disk. Applications that have different version numbers will usually work, but may cause problems in the hard disk during certain routines. So, if the hard disk environment has been upgraded, the applications must be upgraded to the same version.

For the Macintosh environment, the Finder on an application diskette must match the version of the MacWorks environment installed on the hard drive.

The existing versions of both environments are listed below.

Lisa Office System -- Versions 1.0 and 2.0

Lisa 7/7 Office System -- Versions 3.0 and 3.1

MacWorks -- Versions 1.0, 2.0, and 3.0

CONTINUED ON NEXT PAGE

To find out which version of the Lisa Office System you are using, or to find the version number of any Lisa application, follow the steps below.

1. Turn on the system.

2. If you want information about a diskette, insert the diskette you are concerned about.

3. When the desktop appears, select the hard disk or diskette you are concerned about.

4. Pull down the **File/Print** menu and select **Attributes of** whichever device you selected in step 3.

To find out which version of the MacWorks environment you are using, follow the steps below.

NOTE: If you want information about the Finder on an application diskette, you will have to boot the diskette on a Macintosh and follow the instructions below.

1. Turn the system on.

2. When the desktop appears, select the hard disk or diskette you are concerned about.

3. Pull down the **Apple** menu and select **About the Finder.** The version number will appear at the bottom of the finder window.

HARD DISK PROBLEMS

How to Repair a Crashed Disk (with MacWorks installed on it)

If a problem occurs while the operating system is being loaded, such as an address error, a bad system file, or no system file, the startup disk is said to have "crashed." In this case, the Lisa 2/Macintosh XL is unable to continue. A "Sad Macintosh" error icon with the address 0F0064 or 0F0028 may be displayed.

Attempt to repair the hard disk following the steps below.

1. Turn the system off.

2. Turn the system back on. After you hear the first "click," press the **<SPACE BAR>** two or three times.

3. After the system performs its self disagnostic test, a **STARTUP FROM** menu will appear at the upper left corner of the screen.

4. Insert the MacWorks boot diskette.

5. Hold down the **<OPTION>** and **<COMMAND>/<APPLE>** keys and select the microdisk drive from the **STARTUP FROM** menu Keep holding the keys down until the diskette icon appears with a question mark inside.

6. Remove the MacWorks boot diskette and insert tne MacWorks System Diskette.

   If both the hard disk and MacWorks System Diskette ic appear, select both icons. Pull down the **File/Print** menu and open both icons. Copy the system folder fro the system disk onto the hard disk.

   If the hard disk does not appear, pull down the **File/Print** menu to open the MacWorks System disk. Op the "Hard Disk Install" icon on the MacWorks System D and reinitialize the hard disk. If you do not know h to do this, turn to the "Upgrades and Retrofits" tab i this binder. Find **Section 4, Macintosh XL Screen Modification Kit**, and look up "Hard Disk Install."

7. Turn the system off.

8. Use the proper diagnostic diskette to make sure that t system is functioning properly. (See **Section 5, Diagnostics**).

How to Repair a Crashed Disk (with Lisa Office System installed on it)

The startup disk crashes whenever it begins to load the operating system and a problem occurs, such as an address error, a bad system file, or no system file, and the Macintosh XL is unable to continue. A "Sad Macintosh" error icon with the address **0F0064** or **0F0028** may be displayed if you are using MacWorks.

Attempt to repair the hard disk following the steps below.

1. Turn the system off.

2. Turn the system on, after you hear the fist "click," press the **<SPACE BAR>**.

3. Insert the Office System 1 diskette into the microdisk drive.

4. Select the microdisk drive from the **STARTUP FROM** menu.

5. When the Office System installation menu comes up, select **REPAIR**.

   NOTE: Do not reinstall the Office System.

6. Turn off the system, and try booting from the hard disk.

   If the hard disk crashes again, go to the appropriate hard disk Symptom/Cure Table following this section.

ProFile Symptom/Cure Table

SYMPTOM	CURE
System crashes while booting or while in use	- Try doing a hard disk repair (See **Hard Disk Problems**) - Reseat card cage boards - Replace card cage boards, one at a time - Replace hard disk
Bad ProFile icon is displayed or ProFile does not appear on the desktop	- Verify that the ProFile is properly connected. If it is not, do the following: a) turn off ProFile b) turn off system c) reseat parallel card if the ProFile is connected via the card d) reconnect the ProFile e) turn on the ProFile and wait until the ready light stays on steadily f) turn on the system - If using Lisa Office System, check Preferences - If the ProFile is attached, try doing a hard disk repair (See **Hard Disk Problems**) - See **Startup Error Icons /Codes**

Internal Hard Disk Symptom/Cure Table

SYMPTOM	CURE
System crashes while booting or while in use	- Try doing a hard disk repair (See **Hard Disk Problems**) - Reseat card cage boards - Replace card cage boards, one at a time - Replace hard disk
Internal hard disk error icon is displayed or hard disk icon does not appear on the desktop	- Make sure there are two memory boards installed - Do the following to verify that the disk is properly connected: a) remove the front cover b) remove the back cover c) remove the top d) reseat the two cable connections at the top of the hard disk drive e) reinstall top and covers and turn the system on - If using Lisa Office System, check Preferences - Try doing a "hard disk repair" via software (see owner's manual - See **Startup Error Icons /Codes**

MOUSE PROBLEMS

SYMPTOM	CURE
Cursor is not displayed	- Remove and reinsert mouse plug - Replace mouse
Cursor does not move when you push the mouse	- Remove and reinsert mouse plug - Replace mouse - Replace I/O board - Replace CPU board - Replace motherboard
Arrow moves vertically or horizontally only	- Remove and reinsert mouse plug - Replace mouse - Replace I/O board

KEYBOARD PROBLEMS

SYMPTOM	CURE
System does not respond to any keyboard input	- Remove and reinsert the keyboard plug - Replace the keyboard - Turn off the system; if the system does not turn off, go to **System Hang Procedures** - Replace the I/O board - Replace the CPU board - Replace the motherboard
One or more keys on the keyboard don't work	- Replace the keyboard

NOISE PROBLEMS

SYMPTOM	CURE
A sizzling noise coming the system	- Replace the power supply - Adjust brightness in back - Adjust the contrast on video board - Replace video board - Replace flyback
A clicking sound coming from the system (power supply trips)	- Adjust brightness in back - Adjust the contrast on video board - Replace power supply - Replace video board - Replace flyback
Scratching sound coming from the hard disk	- Replace the hard disk

TRANSMITTING/RECEIVING REPAIR PROCEDURE (For Lisa 2 only)

Some Lisa 2 systems that are connected to AppleTalk networks suffer from noise problems on their receiving lines. This noise prevents the Lisa 2 from hearing other devices transmit, and consequently the Lisa 2 may transmit at the same time as another device. When two devices on the same line transmit signals to each other simultaneously, the signals collide and neither device receives a message.

The noise problem is in the Lisa 2 I/O board cicuitry near the battery pack. Follow the steps below to resolve this problem.

1. Remove the I/O board.

2. Carefully cut the trace shown in Figure 1, #1.

3. Clip both leads of the resistor R38 (Figure 1, #2) to completely remove it from the board.

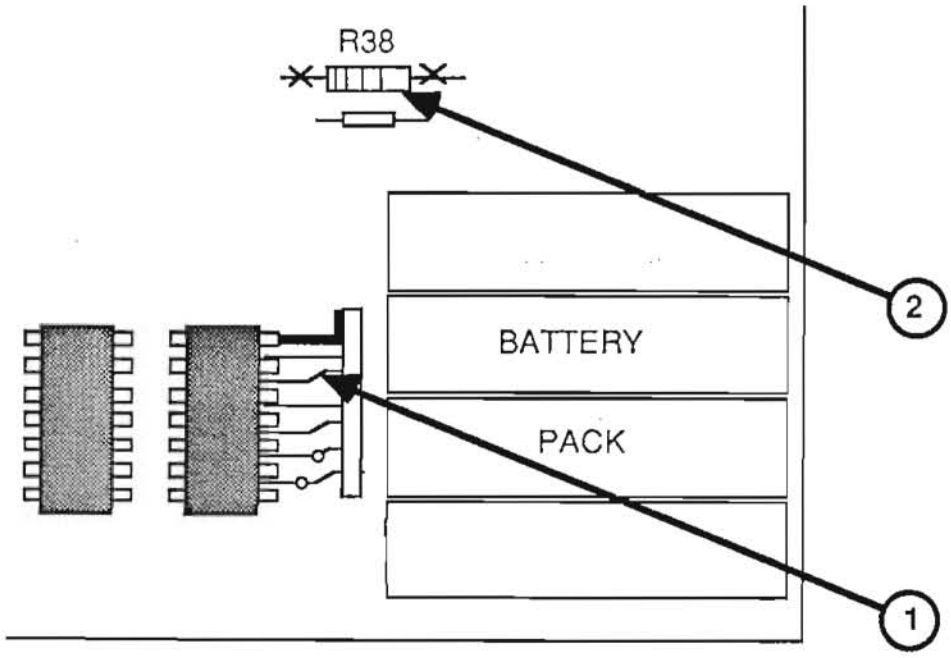

FIGURE 1

APPENDIX A

MACWORKS/LISA 2 OFFICE SYSTEM ERROR MESSAGES

This appendix contains a series of discussions covering the software error messages generated by the Lisa Office System and MacWorks environments. The discussions are grouped into four general categories, with specific entries under each major heading. If you have encountered a software error message, go to the specific entry that corresponds to that message. If you think you may have a hardware problem with your system, refer to the flowcharts and symptom/cure tables in this section.

Disk Problems
- Disk Full or Insufficient Room on Disk
- Damaged Disk
- Difficulty Accessing Disk
- Disk Drive Problems

Document Problems
- Damaged Document
- Difficulty Saving Document

Tool Problems
- Tool Failure
- Difficulty Starting Tool
- Incompatible Version

System Problems
- Insufficient Memory
- System Restart
- Desktop State
- Difficulty Printing
- Difficulty Displaying Preferences

DISK PROBLEMS

Disk Full or Insufficient Room on Disk

Many common desktop operations -- opening or saving documents, for example -- require a certain amount of free disk space. When your disks become crowded, you can make more room in several ways:

Discarding Obsolete Documents - Discard obsolete documents by moving their icons to the "Trash" can. The last thing you discard from a disk stays in the Trash -- and on the storage disk -- until something else from the same disk is also discarded or until you choose the **Empty Trash** item in the **Special** menu. Sometimes the Lisa 2/Macintosh XL destroys objects in the Trash if it needs the disk space. Usually, however, the space occupied by an object is not actually reclaimed until you have thrown away another object from the same disk or chosen **Empty Trash** in the **Housekeeping** menu. Therefore, if you are discarding a group of documents in order to make more room on the disk, choose **Empty Trash** from the **Special** menu afterward.

Moving Objects - You can move some objects to a different storage disk. If you are in the Lisa Office System environment, do not duplicate the object, because that will not remove the copy from the original disk.

In the Macintosh environment, drag the icon you wish to copy onto a different storage disk. You now have two copies of the document, the one you just made and the original. Drag the original document to the trash can to eliminate it.

Repairing the Disk - You can repair the disk, following the procedures in "Hard Disk Problems" in this section.

If, after you have made more space on the disk that holds the document, the Lisa 2/Macintosh XL still indicates that there is not enough room on the disk, check the Status panel of the startup disk window to verify that there is also space available on the startup disk.

Damaged Disk

The Lisa 2/Macintosh XL may tell you that one of your disks is "damaged." This could mean either that some of the information stored on the disk has been altered or that the disk itself is physically damaged.

First, repair the disk following the procedures under **Hard Disk Problems** in this section. Unreadable information may be altered or removed; the names of some documents may change.

If the Lisa 2/Macintosh XL is unable to repair the disk, either the disk or the disk drive probably has a physical problem. If the disk in question is a microdisk, try inserting it in another Lisa 2/Macintosh drive. If the other drive has no trouble with the diskette, then there may be something wrong with the first disk drive. If the other drive cannot read the diskette either, then the disk may have suffered physical damage. Use a backup copy of the diskette.

Difficulty Accessing Disk

First, try restarting the system: put away all open documents, and then turn the Lisa 2/Macintosh XL off and back on again. When the desktop returns, try again to access the disk.

If this procedure works, your system was probably in a temporary error condition caused by the interaction of different tools and documents.

If restarting the system doesn't solve the problem, the most likely cause is a damaged document, disk, or tool. If you are trying to access a document, see **Damaged Document.** If that discussion does not address your problem, see **Damaged Disk**, and then, as a last resort, **Tool Failure** and **Disk Drive Problems.**

Disk Drive Problems

Sometimes a mechanical failure in a disk drive results in errors that appear to come from your documents or disks. You can verify that the drive in question is working properly by trying the disk in the another Lisa 2/Macintosh XL.

If you find that the disk drive and not the diskette is at fault, replace the drive and repair any disks that were used in the damaged drive. A faulty disk drive could have permanently damaged a disk. If this is the case, you'll need to use the backup copy of the disk.

DOCUMENT PROBLEMS

Damaged Document

A document can be damaged in a number of ways. The disk on which the document is stored could be wearing out, for example, or the document may have been damaged during a power failure. Sometimes a software failure leaves a document unreadable.

First, restart the system if you have not already done so. Put away all documents, and then turn the Lisa 2/Macintosh XL off and on again. Try again to open the document.

If the document still won't open, try to duplicate the document and put the duplicate on a different disk. If this works, the original disk is probably not damaged. Try to open the copy. If the Lisa 2/Macintosh XL reports that the copy is also damaged, the document itself probably contains some inconsistent or unreadable information. The Tool could also be damaged.

If you cannot make a duplicate of the document, try to make a copy of the entire disk. Whether or not the copy procedure works, repair the original disk following the instructions in troubleshooting section under **Hard Disk Problems.**

If the document is still damaged after the disk is repaired, discard the document and replace it with a backup copy.

Difficulty Saving Document

Check the status panel of the document's storage disk to see how much free space is left on the disk. If you have saved an earlier version of the document, change the disk display to an alphabetical view, and see how many blocks the document required in its earlier version. Estimate how much space the document now needs, on the basis of whether you have added or removed information. If there is inadequate space available, see **Insufficient Room on Disk.**

If disk space is not the problem, or if you do not want to remove anything to make room on the storage disk, you may be able to save the document by setting it aside on the desktop and then moving it to another disk. (Because some tools will not let you move a document that has not been saved, you may not be able to use this technique.)

TOOL PROBLEMS

Tool Failure

Before you conclude that a tool is actually damaged, restart the system and try to repeat the failure. To restart the system, put away all documents, and then turn the Lisa 2/Macintosh XL off and on again. If the procedure works after a restart, the system was probably in a temporary error condition caused by the interaction of various tools and documents.

If the tool still fails, discard the working copy from your internal hard disk (or ProFile) and replace it with a duplicate of the master tool.

The calculator, the clock, the Preferences, and some of the printing routines (in MacWorks, the **Apple** menu items) are all part of the system software. If replacing the tool doesn't work, or if the problem was with this software in the first place, reinstall the system software (Lisa Office System or MacWorks Hard Disk Install) on your startup disk.

Difficulty Starting Tool

Check the status panel in the window of the disk that holds the tool and, if you started up from a different device, in the window of your startup device. If the number of free blocks is approaching 200 or fewer, see **Insufficient Room on Disk.**

If disk space is not the problem, see **Tool Failure.**

Incompatible Version

From time to time, Apple releases updated versions of the Lisa 2/Macintosh XL software. If you buy an additional Lisa 2/Macintosh XL system more than six months after you bought your first Lisa 2/Macintosh XL system, the computers may come with different versions of the software. (If you have a support agreement, you will always have the most recent updates of all software.)

Old documents are usually compatible with new revisions of the tools. New documents, however, may not be compatible with old versions of the tools; and once you have worked on an old document with a more recent version of the tool, you may no longer be able to work on that document with the old tool. If the Lisa 2/Macintosh XL cannot work on a document because the tool and the document are incompatible, take the document to a Lisa 2/Macintosh XL that has a more recent revision of the tool. To find out the release date of a tool, display an alphabetical or chronological view of the folder in which the tool is stored.

SYSTEM PROBLEMS

Insufficient Memory

Insufficient room in memory usually means either that too many documents are open on the desktop or that the document you are actually working on has gotten too big.

First, put away all documents with which you currently are not working, especially if the documents were created with a different tool from the one you are using.

If the Lisa 2/Macintosh XL still cannot perform the task, restart the system: put away all documents, and turn the Lisa 2/Macintosh XL off and on again. Then open only the document you want to work on, and try the operation again.

If none of these techniques works, then your document is probably too big. Split it into two smaller documents if possible.

System Restart

Sometimes the Lisa 2/Macintosh XL encounters an error condition that it cannot handle. In this case, the Lisa 2/Macintosh XL shuts down the desktop and starts over. If possible, any open documents are suspended in their current states so that you can continue where you left off after the system started again.

If the problem recurs, either your software or your hardware may be damaged.

Try repairing the hard disk by following the procedures in **Hard Disk Problems.** If you can repair the disk, copy all files onto diskette and reinitialize the hard disk. Then reinstall the system software.

If the problem recurs after reinstalling your system software, your system hardware may need repair.

Difficulty Printing

The Lisa 2/Macintosh XL can have difficulty printing a document for a number of reasons, from simple mechanical problems to software failures.

First, verify that the printer is turned on and that all connections are secure. If the printer is properly connected and is on, then turn it off and back on again. If the printer still does not print, see the **Owner's Manual** to set preferences for the printer you are using.

If your system setup checks out, the Lisa 2/Macintosh XL may have insufficient room in memory or insufficient free space on the startup disk. See **Insufficient Memory** and **Insufficient Room on Disk.**

If none of these strategies solves the problem, either the tool you were using or your system software may have failed. See **Tool Failure.**

Difficulty Displaying Preferences

This problem can be caused by an incorrect or bad Video State ROM on the CPU board.

The Video State ROM is a multipurpose chip installed at location 6-C on the CPU board. It contains the serial number and AppleNet number of the system in which it was originally installed.

Whenever you replace the CPU board, you must transfer the customer's Video State ROM to the replacement CPU board.

If the customer's Video State ROM is bad, record the serial number of the system. Call your TAC and order a replacement ROM.

APPENDIX B

OPERATING SYSTEM ERROR MESSAGES

Operating system error messages may help you find the problem, but always double-check using the usual troubleshooting procedures.

-6081 End of exec file input
-6004 Attempt to reset text file with typed-file type
-6003 Attempt to reset nontext file with text type
-1885 ProFile not present during driver initialization
-1882 ProFile not present during driver initialization
-1176 Data in the object have been altered by Scavenger
-1175 File or volume was scavenged
-1174 File was left open or volume was left mounted, and system crashed
-1173 File was last closed by the OS
-1146 Only a portion of the space requested was allocated
-1063 Attempt to mount boot volume from another Lisa or not most recent boot volume
-1060 Attempt to mount a foreign boot disk following a temporary unmount
-1059 The bad block directory of the diskette is almost full or difficult to read
-876 (from CLOSE_OBJECT) The file just closed. May be damaged or contain corrupted data because an I/O error occurred when writing a part of the file that was buffered by the file system
-696 Printer out of paper during initialization
-660 Cable disconnected during ProFile initialization
-626 Scavenger indicated data are questionable, but may be OK
-622 Parameter memory and the disk copy were both invalid
-621 Parameter memory was invalid but the disk copy was valid
-620 Parameter memory was valid but the disk copy was invalid
-413 Event channel was scavenged
-412 Event channel was left open and system crashed
-321 Data segment open when the system crashed. Data possibly invalid.
-320 Could not determine size of data segment
-150 Process was created, but a library used by program has been scavenged and altered
-149 Process was created, but the specified program file has been scavenged and altered
-125 Sepcified process is already terminating
-120 Specified process is already active
-115 Specified process is already suspended

-115	Specified process is already suspended
100	Specified process does not exist
101	Specified process is a system process
110	Invalid priority specified (must be 1..225)
130	Could not open program file
131	File System error while trying to read program file
132	Invalid program file (incorrect format)
133	Could not get a stack segment for new process
134	Could not get a syslocal segment for new process
135	Could not get sysglobal space for new process
136	Could not set up communication channel for new process
138	Error accessing program file while loading
141	Error accessing a library file while loading program
142	Cannot run protected file on this machine
143	Program uses an intrinsic unit not found in the Intrinsic Library
144	Program uses an intrinsic unit whose name/type does not agree with the Intrinsic Library
145	Program uses a shared segment not found in the Intrinsic Library
146	Program uses a shared segment whose name does not agree with the Intrinsic Library
147	No space in syslocal for program file descriptor during process creation
148	No space in the shared IU data segment for the program's shared IU globals
190	No space in syslocal for program file description during List_LibFiles operation
191	Could not open program file
192	Error trying to read program file
193	Cannot read protected program file
194	Invalid program file (incorrect format)
195	Program uses a shared segment not found in the Intrinsic Library
196	Program uses a shared segment whose name does not agree with the Intrinsic Library
198	Disk I/O error trying to read the intrinsic unit directory
199	Specified library file number does not exist in the Intrinsic Library
201	No such exception name declared
202	No space left in the system data area for Declare_Excep_Hdl or Signal_Excep
203	Null name specified as exception name
302	Invalid LDSN
303	No data segment bound to the LDSN
304	Data segment already bound to the LDSN
306	Data segment too large
307	Input data segment path name is invalid
308	Data segment already exists
309	Insufficient disk space for data segment

310 An invalid size has been specified
311 Insufficient system resources
312 Unexpected File System error
313 Data segment not found
314 Invalid address passed to Info_Address
315 Insufficient memory for operation
317 Disk error while trying to swap in data segment
401 Invalid event channel name passed to Make_Event_Chn
402 No space left in system global data area for Open_Event_Chn
403 No space left in system local data area for Open_Event_Chn
404 Non-block-structured device specified in pathname
405 Catalog is full in Make_Event_Chn or Open_Event_Chn
406 No such event channel exists in Kill_Event_Chn
410 Attempt to open a local event channel to send
411 Attempt to open event channel to receive when event channel has a receiver
413 Unexpected File System error in Open_Event_Chn
416 Cannot get enough disk space for event channel in Open_Event_Chn
417 Unexpected File System error in Close_Event_Chn
420 Attempt to wait on a channel that the calling process did not open
421 Wait_Event_Chn returns empty because sender process could not complete
422 Attempt to call Wait_Event_Chn on an empty event-call channel
423 Cannot find corresponding event channel after being blocked
424 Amount of data returned while reading from event channel not of expected size
425 Event channel empty after being unblocked, Wait_Event_Chn
426 Bad request pointer error returned in Wait_Event_Chn
427 Wait_List has illegal length specified
428 Receiver unblocked because last sender closed
429 Unexpected File System error in Wait_Event_Chn
430 Attempt to send to a channel which the calling process does not have open
431 Amount of data transferred while writing to event channel not of expected size
432 Sender unblocked because receiver closed in Send_Event_Chn
433 Unexpected File System error in Send_Event_Chn
440 Unexpected File System error in Make_Event_Chn
441 Event channel already exists in Make_Event_Chn
445 Unexpected File System error in Kill_Event_Chn
450 Unexpected File System error in Flush_Event_Chn
530 Size of stack expansion request exceeds limit specified for program

531 Cannot perform explicit stack expansion due to lack of memory
532 Insufficient disk space for explicit stack expansion
600 Attempt to perform I/O operation on non I/O request
602 No more alarms available during driver initialization
605 Call to nonconfigured device driver
606 Cannot find sector on floppy diskette (disk unformatted)
608 Illegal length or disk address for transfer
609 Call to nonconfigured device driver
610 No more room in sysglobal for I/O request
613 Unpermitted direct access to spare track with sparing enabled on floppy drive
614 No disk present in drive
615 Wrong call version to floppy drive
616 Unpermitted floppy drive function
617 Checksum error on floppy diskette
618 Cannot format, or write protected, or error unclamping floppy diskette
619 No more room in sysglobal for I/O request
623 Illegal device control parameters to floppy drive
625 Scavenger indicated data are bad
630 The time passed to Delay_Time, Convert_Time, or Send_Event_Chn has invalid year
631 Illegal timeout request parameter
632 No memory available to initialize clock
634 Illegal timed event id of -1
635 Process got unblocked prematurely due to process termination
636 Timer request did not complete successfully
638 Time passed to Delay_Time or Send_Event_Chn more than 23 days from current time
639 Illegal date passed to Set_Time, or illegal date from system clock in Get_Time
640 RS-232 driver called with wrong version number
641 RS-232 read or write initiated with illegal parameter
642 Unimplemented or unsupported RS-232 driver function
646 No memory available to initialize RS-232
647 Unexpected RS-232 timer interrupt
648 Unpermitted RS-232 initialization, or disconnect detected
649 Illegal device control parameters to RS-232
652 N-port driver not initialized prior to ProFile
653 No room in sysglobal to initialize ProFile
654 Hard error status returned from drive
655 Wrong call version to ProFile
656 Unpermitted ProFile function
657 Illegal device control parameter to ProFile
658 Premature end of file when reading from driver
659 Corrupt File System header chain found in driver
660 Cable disconnected

662 Parity error while sending command or writing data to ProFile
663 Checksum error or CRC error or parity error in data read
666 Timeout
670 Bad command response from drive
671 Illegal length specified (must = 1 on input)
672 Unimplemented console driver function
673 No memory available to initialize console
674 Console driver called with wrong version number
675 Illegal device control
680 Wrong call version to serial driver
682 Unpermitted serial driver function
683 No room in sysglobal to initialize serial driver
685 Eject not allowed this device
686 No room in sysglobal to initialize n-port card driver
687 Unpermitted n-port card driver function
688 Wrong call version to n-port card driver
690 Wrong call version to parallel printer
691 Illegal parallel printer parameters
692 N-port card not initialized prior to parallel printer
693 No room in sysglobal to initialize parallel printer
694 Unimplemented parallel printer function
695 Illegal device control parameters (parallel printer)
696 Printer out of paper
698 Printer offline
699 No response from printer
700 Mismatch between loader version number and Operating System version number
701 OS exhausted its internal space during startup
702 Cannot make system process
703 Cannot kill pseudo-outer process
704 Cannot create driver
706 Cannot initialize floppy disk driver
707 Cannot initialize the File System volume
708 Hard disk mount table unreadable
709 Cannot map screen data
710 Too many slot-based devices
724 The boot tracks do not know the right File System version
725 Either damaged File System or damaged contents
726 Boot device read failed
727 The OS will not fit into the available memory
728 SYSTEM.OS is missing
729 SYSTEM.CONFIG is corrupt
730 SYSTEM.OS is corrupt
731 SYSTEM.DEBUG or SYSTEM.DEBUG2 is corrupt
732 SYSTEM.LLD is corrupt
733 Loader range error
734 Wrong driver is found. For instance, storing a diskette loader on a ProFile

735 SYSTEM.LLD is missing
736 SYSTEM.UNPACK is missing
737 Unpack of SYSTEM.OS with SYSTEM.UNPACK failed
791 Configurable driver (CD) code file not executable
792 Could not get code space for the CD
793 IO error reading CD code file
794 CD code file not found
795 CD has more than 1 segment
796 Cound not get temporary space while loading CD
801 IO Result <> 0 on I/O using the Monitor
802 Asynchronous I/O request not completed successfully
803 Bad combination of mode parameters
806 Page specified is out of range
809 Invalid arguments (page, address, offset, or count)
810 The requested page could not be read in
816 Not enough sysglobal space for File System buffers
819 Bad device number
820 No space in sysglobal for asynchronous request list
821 Already initialized I/O for this device
822 Bad device number
825 Error in parameter values (Allocate)
826 No more room to allocate pages on device
828 Error in parameter values (Deallocate)
829 Partial deallocation only (ran into unallocated region)
835 Invalid s-file number
837 Unallocated s-file or I/O error
838 Map overflow: s-file too large
839 Attempt to compact file past PEOF
840 The allocation map of this file is truncated
841 Unallocated s-file or I/O error
843 Requested exact fit, but one could not be provided
847 Requested transfer count is <= 0
848 End of file encountered
849 Invalid page or offset value in parameter list
852 Bad unit number
854 No free slots in s-list directory (too many s-files)
855 No available disk space for file hints
856 Device not mounted
857 Empty, locked, or invalid s-file
861 Relative page is beyond PEOF (bad parameter value)
864 No sysglobal space for volume bitmap
866 Wrong FS version or not a valid Lisa FS volume
867 Bad unit number
868 Bad unit number
869 Unit already mounted (mount)/no unit mounted
870 No sysglobal space for DCB or MDDF
871 Parameter not a valid s-file ID
872 No sysglobal space for s-file control block
873 Specified file is already open for private access
874 Device not mounted

875 Invalid s-file ID or s-file control block
879 Attempt to postion past LEOF
881 Attempt to read empty file
882 No space on volume for new data page of file
883 Attempt to read past LEOF
884 Not first auto-allocation, but file was empty
885 Could not update filesize hints after a write
886 No syslocal space for I/O request list
887 Catalog pointer does not indicate a catalog (bad parameter)
888 Entry not found in catalog
890 Entry by that name already exists
891 Catalog is full or is damaged
892 Illegal name for an entry
894 Entry not found, or catalog is damaged
895 Invalid entry name
896 Safety switch is on--cannot kill entry
897 Invalid bootdev value
899 Attempt to allocate a pipe
900 Invalid page count or FCB pointer argument
901 Could not satisfy allocation request
921 Pathname invalid or no such device
922 Invalid label size
926 Pathname invalid or no such device
927 nvalid label size
941 Pathname invalid or no such device
944 Object is not a file
945 File is not in the killed state
946 Pathname invalid or no such device
947 Not enough space in syslocal for File System refdb
948 Entry not found in specified catalog
949 Private access not allowed if file already open shared
950 Pipe already in use, requested access not possible or dwrite not allowed
951 File is already opened in private mode
952 Bad refnum
954 Bad refnum
955 Read access not allowed to specified object
956 Attempt to position FMARK past LEOF not allowed
957 Negative request count is illegal
958 Nonsequential access is not allowed
959 System resources exhausted
960 Error writing to pipe while an unsatisfied read was pending
961 Bad refnum
962 No WRITE or APPEND access allowed
963 Attempt to position FMARK too far past LEOF
964 Append access not allowed in absolute mode
965 Append access not allowed in relative mode
966 Internal inconsistency of FMARK and LEOF (warning)
967 Nonsequential access is not allowed

968	Bad refnum
971	Pathname invalid or no such device
972	Entry not found in specified catalog
974	Bad refnum
977	Bad refnum
978	Page count is nonpositive
979	Not a block-structured device
981	Bad refnum
982	No space has been allocated for specified file
983	Not a block-structured device
985	Bad refnum
986	No space has been allocated for specified file
987	Not a block-structured device
988	Bad refnum
989	Caller is not a reader of the pipe
990	Not a block-structured device
994	Invalid refnum
995	Not a block-structured device
999	Asynchronous read was unblocked before it was satisfied
1021	Pathname invalid or no such entry
1022	No such entry found
1023	Invalid newname, check for '-' in string
1024	New name already exists in catalog
1031	Pathname invalid or no such entry
1032	Invalid transfer count
1033	No such entry found
1041	Pathname invalid or no such entry
1042	Invalid transfer count
1043	No such entry found
1051	No device or volume by that name
1052	A volume is already mounted on device
1053	Attempt to mount temporarily unmounted boot volume just unmounted from this Lisa
1054	The bad block directory of the diskette is invalid
1061	No device or volume by that name
1062	No volume is mounted on device
1071	Not a valid or mounted volume for working directory
1091	Pathname invalid or no such entry
1092	No such entry found
1101	Invalid device name
1121	Invalid device, not mounted, or catalog is damaged
1122	(from RESET_CATALOG) There is no space available in the process' local data area to allocate the catalog scan buffer
1124	(from GET_NEXT-ENTRY) There is no space available in the process' local data area to allocate the catalog scan buffer
1128	Invalid pathname, device, or volume not mounted
1130	File is protected; cannot open due to protection violation

1131 No device or volume by that name
1132 No volume is mounted on that device
1133 No more open files in the file list of that device
1134 Cannot find space in sysglobal for open file list
1135 Cannot find the open file entry to modify
1136 Boot volume not mounted
1137 Boot volume already unmounted
1138 Caller cannot have higher priority than system processes when calling ubd
1141 Boot volume was not unmounted when calling rbd
1142 Some other volume still mounted on the boot device when calling rbd
1143 No sysglobal space for MDDF to do rbd
1144 Attempt to remount volume which is not the temporarily unmounted boot volume
1145 No sysglobal space for bit map to do rbd
1158 Track-by-track copy buffer is too small
1159 Shutdown requested while boot volume was unmounted
1160 Destination device too small for track-by-track copy
1161 Invalid final shutdown mode
1162 Power is already off
1163 Illegal command
1164 Device is not a diskette device
1165 No volume is mounted on the device
1166 A valid volume is already mounted on the device
1167 Not a block-structured device
1168 Device name is invalid
1169 Could not access device before initialization using default device parameters
1170 Could not mount volume after initialization
1171 '-' is not allowed in a volume name
1172 No space available to initialize a bitmap for the volume
1176 Cannot read from a pipe more than half of its allocated physical size
1177 Cannot cancel a read request for a pipe
1178 Process waiting for pipe data got unblocked because last pipe writer closed it
1180 Cannot write to a pipe more than half of its allocated physical size
1181 No system space left for request block for pipe
1182 Writer process to a pipe got unblocked before the request was satisfied
1183 Cannot cancel a write request for a pipe
1184 Process waiting for pipe space got unblocked because the reader closed the pipe
1186 Cannot allocate space to a pipe while it has data wrapped around
1188 Cannot compact a pipe while it has data wrapped around
1190 Attempt to access a page that is not allocated to the pipe

1191	Bad parameter
1193	Premature end of file encountered
1196	Something is still open on device--cannot unmount
1197	Volume is not formatted or cannot be read
1198	Negative request count is illegal
1199	Function or procedure is not yet implemented
1200	Illegal volume parameter
1201	Blank file parameter
1202	Error writing destination file
1203	Invalid UCSD directory
1204	File not found
1210	Boot track program not executable
1211	Boot track program too big
1212	Error reading boot track program
1213	Error writing boot track program
1214	Boot track program file not found
1215	Cannot write boot tracks on that device
1216	Could not create/close internal buffer
1217	Boot track program has too many code segments
1218	Could not find configuration information entry
1219	Could not get enough working space
1220	Premature EOF in boot track program
1221	Position out of range
1222	No device at that position
1225	Scavenger has detected an internal inconsistency symptomatic of a software bug
1226	Invalid device name
1227	Device is not block structured
1228	Illegal attempt to scavenge the boot volume
1229	Cannot read consistently from the volume
1230	Cannot write consistently to the volume
1231	Cannot allocate space (Heap segment)
1232	Cannot allocate space (Map segment)
1233	Cannot allocate space (SFDB segment)
1237	Error rebuilding the volume root directory
1240	Illegal attempt to scavenge a non-OS-formatted volume
1295	The allocation map of this file is damaged and cannot be read
1296	Bad string argument has been passed
1297	Entry name for the object is invalid (on the volume)
1298	S-list entry for the object is invalid (on the volume)
1807	No disk in floppy drive
1820	Write-protect error on floppy drive
1822	Unable to clamp floppy drive
1824	Floppy drive write error
1882	Bad response from ProFile
1885	ProFile timeout error
1998	Invalid parameter address
1999	Bad refnum
6001	Attempt to access unopened file

6002 Attempt to reopen a file which is not closed using an open FIB (file info block)
6003 Operation incompatible with access mode
6004 Printer offline
6005 File record type incompatible with character device (must be byte sized)
6006 Bad integer (read)
6010 Operation incompatible with file type or access mode
6081 Premature end of exec file
6082 Invalid exec (temporary) file name
6083 Attempt to set prefix with null name
6090 Attempt to move console with exec or output file open
6101 Bad real (read)
6151 Attempt to reinitalize heap already in use
6152 Bad argument to NEW (negative size)
6153 Insufficient memory for NEW request
6154 Attempt to RELEASE outside of heap

Operating System Error Codes

The error codes listed below are generated only when a nonrecoverable error occurs while in Operating System code.

10050 Request block is not chained to a PCB (Unblk_Req)
10051 Bld_Req is called with interrupts off
10100 An error was returned from SetUp_Directory or a Data Segment Routine Setup_IUInfo)
10102 Error > 0 trying to create shell (Root)
10103 Sem_Count > 1 (Init_Sem)
10104 Could not open event channel for shell (Root)
10197 Automatic stack expansion fault occurred in system code (Check_Stack)
10198 Need_Mem set for current process while scheduling is disabled SimpleScheduler)
10199 Attempt to block for reason other than I/O while scheduling is disabled (SimpleScheduler)
10201 Hardware exception occurred while in system code
10202 No space left from Sigl_Excep call in Hard_Excep
10203 No space left from Sigl_Excep call in Nmi_Excep
10205 Error from Wait_Event_Chn called in Excep_Prolog
10207 No system data space in Excep_Setup
10208 No space left from Sigl_Excep call in range error
10212 Error in Term_Def_Hdl from Enable_Excep
10213 Error in Force_Term_Excep, no space in Enq_Ex_Data
10401 Error from Close_Event_Chn in Ec_Cleanup
10582 Unable to get space in Freeze_Seg
10590 Fatal memory parity error
10593 Unable to move memory manager segment during startup
10594 Unable to swap in a segment during startup
10595 Unable to get space in Extend_MMlist

10596 Trying to alter size of segment that is not data or stack (Alt_DS_Size)
10597 Trying to allocate space to an allocated segment (Alloc_Mem)
10598 Attempting to allocate a nonfree memory region (Take_Free)
10599 Fatal Disk error trying to read system code into memory
10600 Error attempting to make timer pipe
10601 Error from Kill_Object of an existing timer pipe
10602 Error from second Make_Pipe to make timer pipe
10603 Error from Open to open timer pipe
10604 No syslocal space for head of timer list
10605 Error during allocate space for timer pipe, or interrupt from nonconfigured device
10609 Interrupt from nonconfigured device
10610 Error from info about timer pipe
10611 Spurious interrupt from floppy drive #2
10612 Spurious interrupt from floppy drive #1, or no syslocal space for timer list element
10613 Error from Read_Data of timer pipe
10614 Actual returned from Read_Data is not the same as requested from timer pipe
10615 Error from open of the receiver's event channel
10616 Error from Write_Event to the receiver's event channel
10617 Error from Close_Event_Chn on the receiver's pipe
10619 No sysglobal space for timer request block
10624 Attempt to shut down floppy disk controller while drive is still busy
10637 Not enough memory to initialize system timeout drives
10675 Spurious timeout on console driver
10699 Spurious timeout on parallel printer driver
10700 Mismatch between loader version number and Operating System version number
10701 OS exhausted its internal space during startup
10702 Cannot make system process
10703 Cannot kill pseudo-outer process
10704 Cannot create driver
10706 Cannot initialize floppy disk driver
10707 Cannot initialize the File System volume
10708 Hard disk mount table unreadable
10709 Cannot map screen data
10710 Too many slot-based devices
10724 The boot tracks do not know the right File System version
10725 Either damaged File System or damaged contents
10726 Boot device read failed
10727 The OS will not fit into the available memory
10728 SYSTEM.OS is missing
10729 SYSTEM.CONFIG is corrupt
10730 SYSTEM.OS is corrupt

10731	SYSTEM.DEBUG or SYSTEM.DEBUG2 is corrupt
10732	SYSTEM.LLD is corrupt
10733	Loader range error
10734	Wrong driver is found. For instance, storing a diskette loader on a ProFile
10735	SYSTEM.LLD is missing
10736	SYSTEM.UNPACK is missing
10737	Unpack of SYSTEM.OS with SYSTEM.UNPACK failed
11176	Found a pending write request for a pipe while in Close_Object when it is called by the last writer of the pipe
11177	Found a pending read request for a pipe while in Close_Object when it is called by the (only possible) reader of the pipe
11178	Found a pending read request for a pipe while in Read_Data from the pipe
11180	Found a pending write request for a pipe while in Write_Data to the pipe
118xx	Error xx from diskette ROM (See OS errors 18xx)
11901	Call to Getspace or Relspace with a bad parameter, or free pool is bad

LISA/MACINTOSH XL UPGRADE AND RETROFIT

TABLE OF CONTENTS

Section 1: Lisa 2/5 Inventory Upgrade Instructions

Section 2: Lisa to Lisa 2 Upgrade

Section 3: Lisa to Lisa 2/10 Upgrade

Section 4: Macintosh XL Screen Modification Kit

apple computer

Lisa 2/5 Inventory Upgrade Instructions

CPU

1) Order and receive A6P1001 Lisa 2/5 upgrade kit.

2) Open mainframe package and upgrade the hardware, using the directions in the service procedures binder, or the directions in the upgrade kit.

3) Take out either 1/2 megabyte memory board. Sell it separately as part number A6B0204.

4) Repackage the Lisa, clearly labelling the package "Lisa 2". It is now equivalent to part number A6S0304 - Lisa 2.

Accessory Kit

5) Open the Lisa accessory kit.

6) Open the plastic bag from the accessory kit.

- -Discard the gray sheet entitled "Setup Procedures".
- -Discard the packing list.
- -Pull out the shrink-wrapped blank binder and set it aside.
- -Pull out the shrink-wrapped Owner's Guide.
  - -Open the Owner's Guide.
  - -Pull out the 5 1/4" Office System diskettes and set them aside.
  - -Take out the pages and throw them away.
  - -Insert the new Lisa 2 Owner's Guide pages from the upgrade kit.
  - -Insert the new Lisa 2 Owner's Guide errata sheets from the upgrade kit.
  - -Put the Owner's Guide back in the binder box.
  - -Return the Owner's Guide in binder box to the accessory kit.
- -Reclose the accessory kit. Label the Lisa 2 accessory kit A6M0009.

Office System

7) Take the four plastic sleeves from the upgrade kit, containing:
   Office System 1 & 2
   Office System 3 & 4
   LisaGuide
   two blank diskettes.

apple computer

Put them in the blank binder that you removed from the accessory kit and return the binder into its binder box. This is now the finished good part A6D0270, Lisa Office System.

Applications

8) For each application package that you have in stock:
   -Find the diskette in plastic sleeve and errata sheet for that application.
   -Attach them to the appropriate Lisa application package.
      -Open the shrink wrap.
      -Remove the sleeve.
      -Take the binder out of the box.
      -Pull out the 5 1/4" diskette for return to Apple.
      -Insert the plastic holder with micro diskette in the front of the manual.
      -Remove errata sheets presently in the manual.
      -Insert the errata sheets from the upgrade kit.
      -Return the manual to the manual box.
      -Replace the plastic sleeve.
      -Label the package with the appropriate Lisa 2 part number.
   -Sell as Lisa 2 finished goods.

apple computer

Lisa to Lisa 2 Upgrade

Upgrading a Lisa 1.0 to a Lisa 2 requires three major steps:

1. Save Lisa 1.0 diskette information onto the ProFile.

   a. If you choose to save the customer's diskette files, have the customer bring in the ProFile along with the Lisa 1.0. Refer to Appendix 1 (page 3) of the Customer Instructions that came with Upgrade Kit.

   b. Be sure that the customer has obtained updates to the language products (Basic +, Pascal, COBOL,) that he previously owned.

   NOTE: The Language product updates can be obtained by sending the master diskettes (with a return address) to:

   Apple/Logo
   1531 Almaden Rd.
   San Jose, Ca. 95125

2. Perform the Lisa 2 hardware installation (procedures provided on the following pages).

3. Transfer data files previously saved on the ProFile to microdiskettes.

   a. Make sure that the customer purchases enough microdiskettes to carry all of the data files previously saved on the ProFile. This would be a maximum of eight for each ProFile; two are included with the Upgrade Kit.

   b. If you choose to reload the customer's data files onto the microdiskettes, then refer to page 2, step B, of the Customer Instructions that came with the Upgrade Kit.

apple computer

The hardware procedures for upgrading a Lisa 1.0 to a Lisa 2 are listed on the table below. Follow the procedures in the order in which they are listed in the first column of the conversion table. The second column of the table tells you which section of the Lisa 2 Technical Procedures contains the specific instructions for the procedure. The third and fourth columns list the page numbers and specific steps to follow to complete the procedures necessary for the upgrade.

Lisa to Lisa 2 Conversion Table

PROCEDURE	SECTION /TITLE	PAGE	STEPS
1. Power Down and Remove AC Cord	———	———	———
2. Remove Rear Panel	1-Take Apart Removing Rear Panel	13	1 & 2
3. Remove Card Cage	1-Take Apart Removing Cage Cage	19	2 & 3
4. Remove I/O and CPU Boards	1-Take Apart Removing Boards	19	3 - 5
5. Remove Old ROMs and Install New ROMs in CPU Board	Go To Page 3 Attached		
6. Remove Old Controller ROM and Install New ROM in I/O Board	Go To Page 4 Attached		
7. Clip Both Leads from R 47 and R41 on I/O Board			
8. Reinstall CPU and I/O Boards	1-Take Apart Installing Boards	20	5 - 4
9. Replace Card Cage and Rear Panel	1-Take Apart Replacing Card Cage	20	1 - 3
10. Remove Front Panel	1-Take Apart Removing Front Panel	3	1 - 4
11. Remove Drive Module	1-Take Apart Removing Drive Module	5	1 - 4
12. Install Lisa 2 Drive Module	Go To Page 5 Attached		
13. Install New Front Panel	1-Take Apart Replacing Front Panel	3	1 - 3

apple computer

Changing ROMs

1. Follow steps a through c to complete step 5 listed on the conversion table.

   a. Use an IC puller to remove both boot ROMs from the CPU board. (See Diagram below.)

   b. Insert the low address ROM (labeled "L") into the 28-pin socket nearest the right edge of the CPU board.

   c. Insert the high address ROM (labeled "H") into the socket at the left of the low address ROM socket.

   CAUTION: Be sure to orient the ROMs so that the notch is facing the same direction as the notches on the surrounding chips.

CPU BOARD

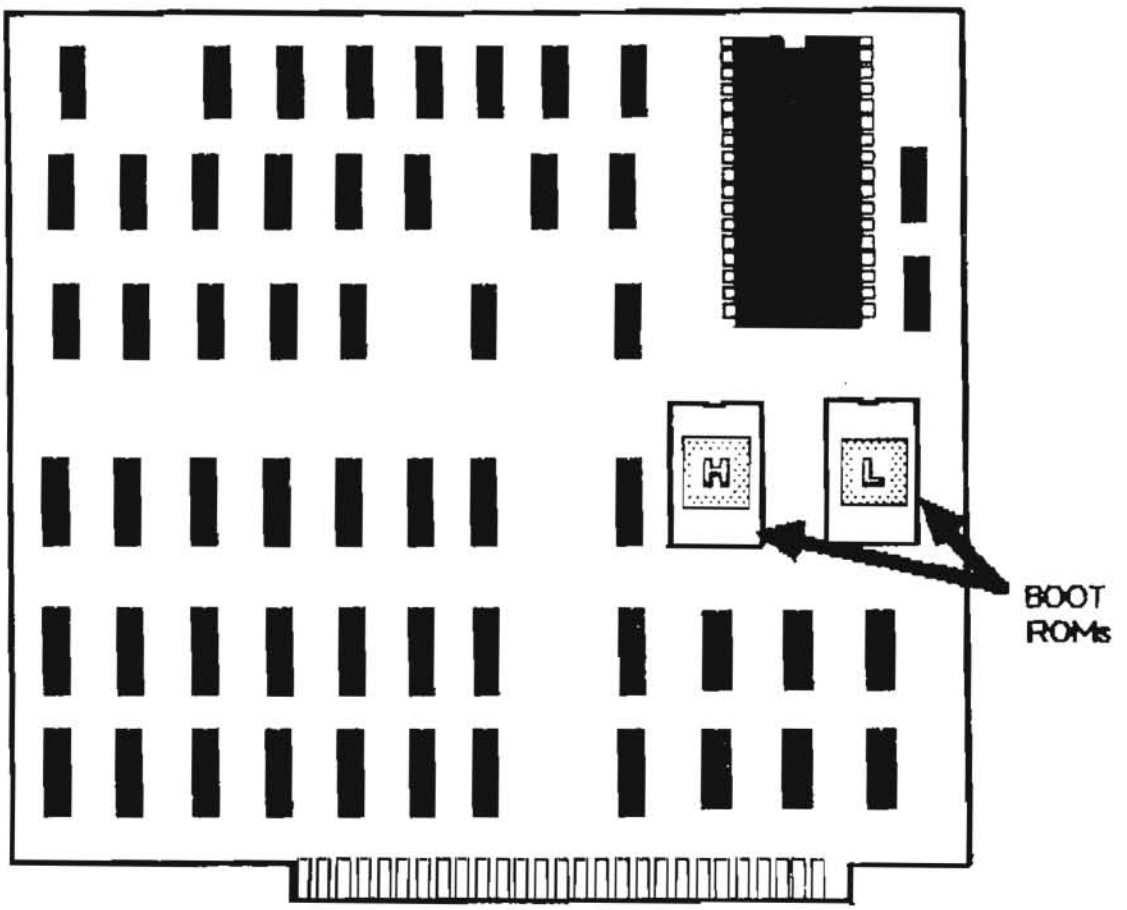

2. Follow steps a though d to complete steps 6 and 7 listed on the conversion table.

   a. Use an IC puller to remove the 24-pin controller ROM shown in the diagram below.

   b. Insert the new Lisa 2 controller ROM into the socket from which you removed the old ROM.

   CAUTION: Be sure to orient the ROM so that the notch is facing the same direction as the notches on the surrounding I/O board chips.

   c. Cut both leads of resistor R47 at location F3 (on the lower left side of the I/O board). (See Diagram below.)

   d. Cut both leads of resistor R41 at location F5 on the I/O board. (See Diagram below.)

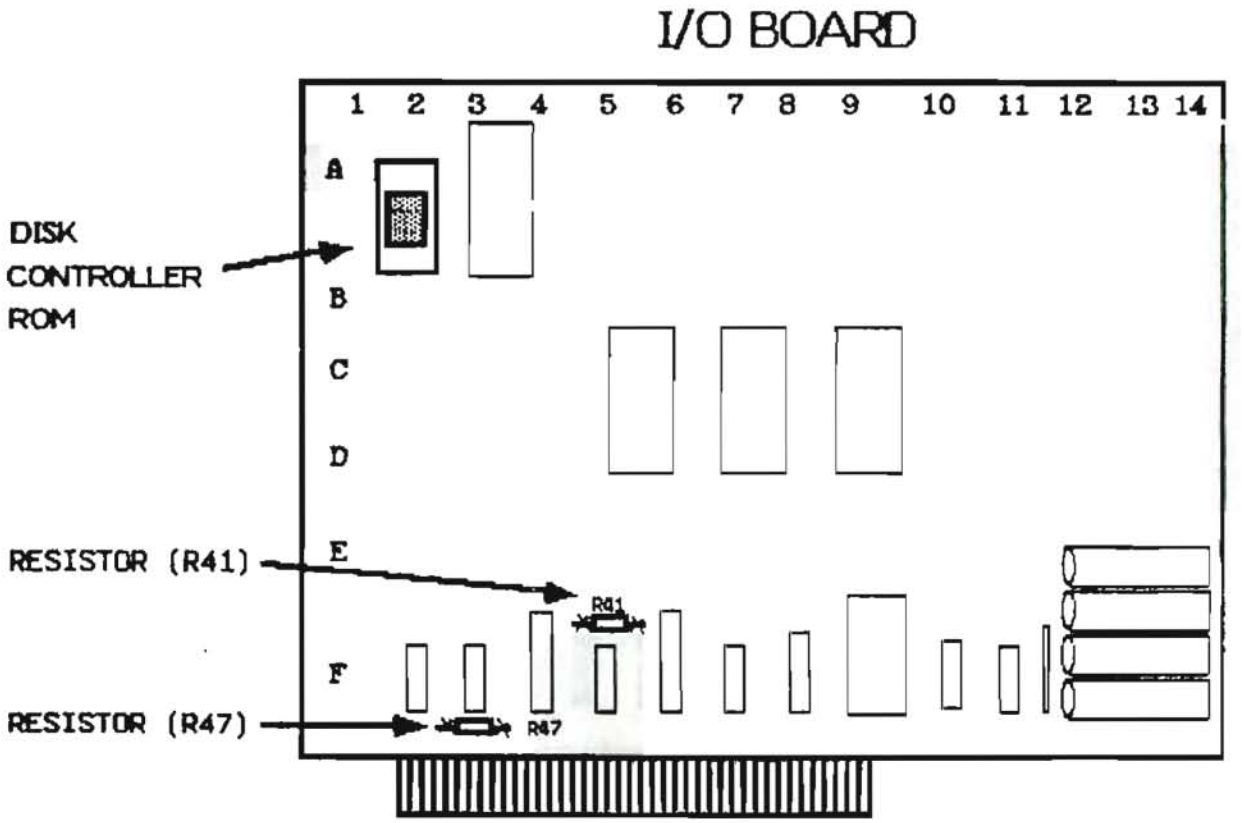

apple computer

Installing the Micro Disk Drive Module

1. Locate the drive cables that are fastened to the floor of the disk drive chamber by two cable clamps.

2. Roll the top cable half way up and carefully tuck it back into the well of the disk drive chamber.

3. Locate the connector at the rear of the inferface card mounted on the inner wall of the **Lisa 2** disk drive carrier.

4. Connect the lower ribbon cable to the connector so that the **stripe is facing downward.** (See Diagram below).

   NOTE: The stripe should should be at the left hand side of the ribbon cable. If there is no stripe on the cable, then connect the lower ribbon cable so that the left side of the connector is facing downward. (See Diagram below).

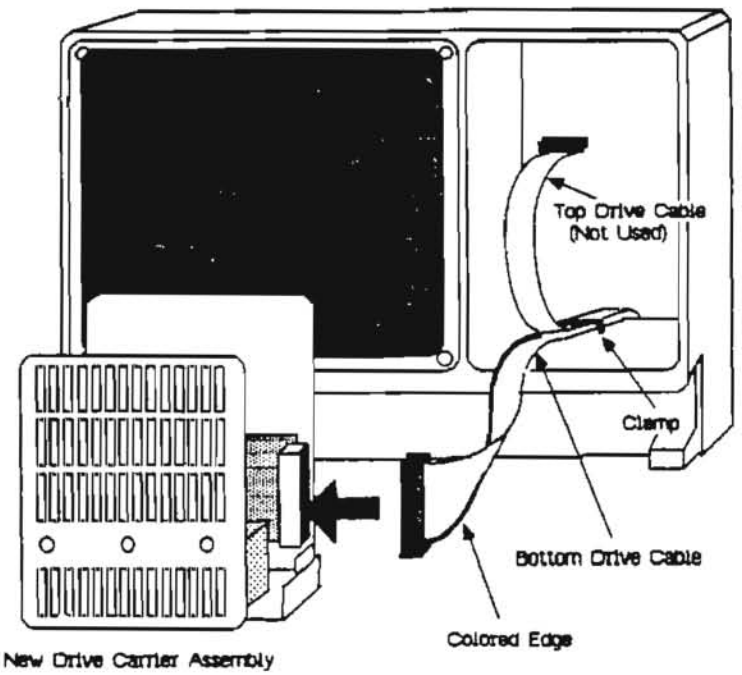

   CAUTION: Connecting the lower ribbon cable backward could cause damage to the micro disk drive.

5. Slide the disk drive module all the way into its compartment.

6. Secure the module by pushing in on the thumbscrew at the base of the carrier and turning it clockwise until it is snug.

apple computer

LISA TO LISA 2/10 UPGRADE

SAVING FLOPPY DISK FILES

If you are upgrading a Lisa 1.0, save your floppy disk data on the ProFile, so that your files can be transferred onto 3.5" micro diskettes. Follow the procedures below if you do not know how to do this.

If you are upgrading a Lisa 2.0, or 2.5, go to Page 3, **Lisa 2/10 Hardware Installation.**

Note for Programmers: The language product versions that ran with the old Office System (version 1.0) will NOT run with the new Office System (version 3.0). So, before upgrading your Lisa, you should make sure that you have received the update to the Pascal Workshop.

1. Connect the ProFile to the Lisa 1.0.

2. Turn on the ProFile and wait until the ready light is stable.

3. Turn on the Lisa and insert a diskette containing files to be saved.

4. When the diskette icon appears on the screen, use the mouse to pull down the "File/Print" menu at the upper left corner of the screen. Select "Open" to display the contents of the diskette.

5. If you want to save all the files on the diskette, use the mouse to pull down the "EDIT" window and select "Select All Icons". Go to Step 6.

   If you wish to save only certain files on the diskette, hold down the "SHIFT" key while you use the mouse to select all the icons representing the files you wish to save. (Be sure not to miss icons that may not be visible in the window.)

6. Use the mouse to pull down the "File/Print" menu and select "Duplicate".

7. Move the pointer to one of the flashing icons. Hold down the mouse button while you move the pointer to the ProFile, and release the button. All selected files will automatically be copied, one at a time, onto the ProFile.

8. Repeat Steps 3 through 7 above for all of your diskettes.

10. Turn off the Lisa and remove the diskette(s).

    CAUTION: DO NOT TURN OFF THE PROFILE UNTIL THE "LISA" ON/OFF BUTTON LIGHT IS OUT!

11. Turn off the ProFile and any other peripheral devices.

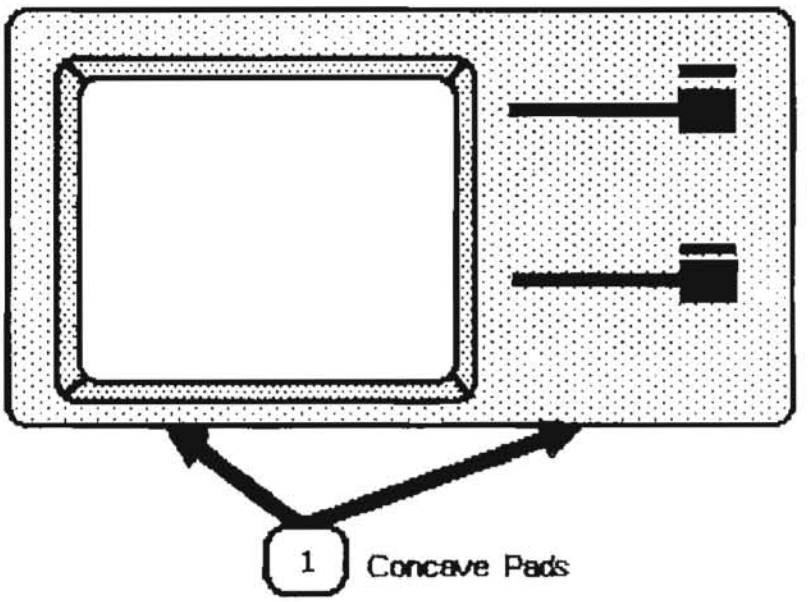

FIGURE 1

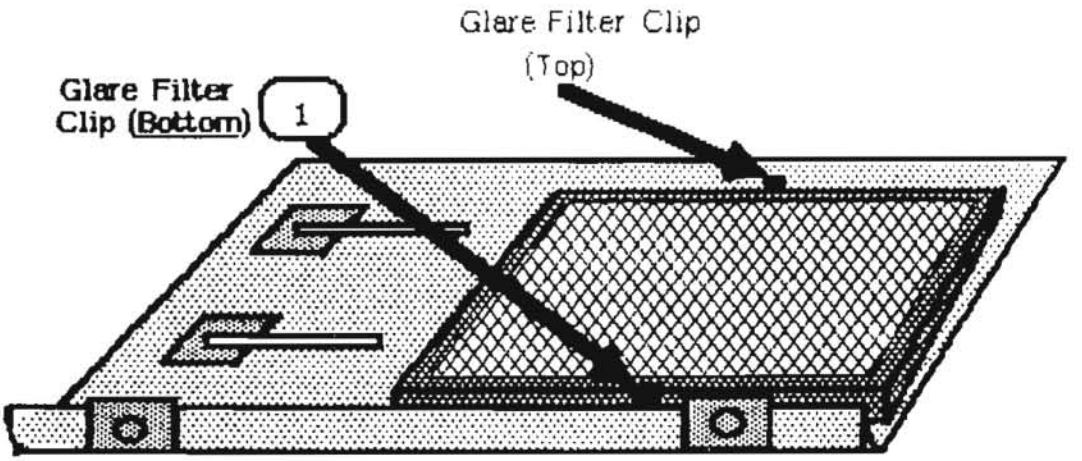

FIGURE 2

apple computer

LISA 2/10 HARDWARE INSTALLATION

The **Keyboard, Mouse, AC Cord, Glare Filter, CPU Board, Memory Boards, and Expansion Cards** must be removed from the Lisa 1.0 or 2.0. After all these modules have been removed, they must be installed inside the Lisa 2/10.

NOTE: YOU MUST HAVE A PARALLEL EXPANSION CARD IN ORDER TO RECONNECT THE PROFILE TO THE LISA 2/10.

Remove the Front Panel from the Lisa 1.0 (2.0)

1. Turn the Lisa off.

2. Disconnect the Lisa 1.0 (2.0) and all peripherals from the wall outlet.

   CAUTION: ALWAYS GRASP THE HOUSING (THE PART THAT PLUGS INTO THE CONNECTING SOCKET) OF A CABLE CONNECTOR WHEN DISCONNECTING OR CONNECTING IT. NEVER PULL ON THE CABLE ITSELF.

3. Disconnect the AC cord and all peripheral connectors, including the mouse and keyboard, from the Lisa.

4. Place one finger on each of the two concave pads beneath the front panel (see Figure 1, #1).

5. Push the pads up and pull the bottom of the panel forward and down.

Removing the Glare Filter

1. Set the front panel on a flat surface, face down.

2. Push the frame of the glare filter out from under the metal clip (see Figure 2, #1) located at the bottom center of the front panel.

3. Grasp the frame by the lower edge, and lift the lower edge up until the top edge pops out.

Replacing the Front Panel

1. Hold the panel with one finger on each concave pad along the bottom edge.

2. Insert the upper edge of the panel behind the lip of the top housing on the Lisa.

3. Pressing the concave pads up, push the bottom edge of the panel against the Lisa until the panel snaps into place.

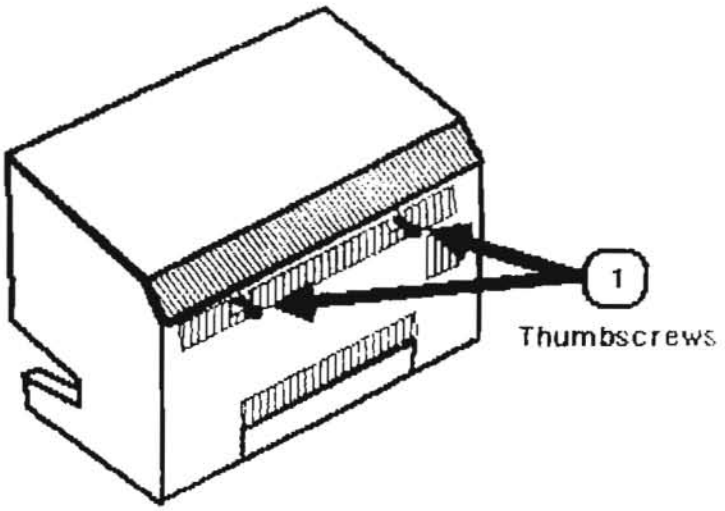

FIGURE 3

FIGURE 4

FIGURE 5

Removing the Rear Panel

1. Turn the back of the Lisa toward you.

2. Turn the two thumbscrews (see Figure 3, #1) along the upper edge of the rear panel counterclockwise until they won't turn any further.

   These screws loosen but do not come free from the rear panel.

3. Tilt the panel slightly toward you and lift it away from the Lisa.

Removing Expansion Cards

Follow the procedures below to remove each expansion card from the Lisa.

1. Pull out the metal lever extending from the plastic cap at the bottom of the card. (See Figure 4.)

2. Turn the lever clockwise 90 degrees, to the 3 o'clock position. If you encounter too much resistance while turning the lever, use a pair of pliers.

3. Holding the card by the edge, pull it straight out of the slot.

4. Turn the lever counterclockwise 90 degrees, back to the 12 o'clock position.

5. Push the lever back into the plastic cap.

Removing the Card Cage

1. Brace your thumbs against the lower edge of the Lisa and pull hard on the bar that runs just above the row of connectors along the bottom edge of the card cage. (See Figure 5.)

   CAUTION: BE CAREFUL NOT TO PUT ANY PRESSURE ON THE SMALL COMPONENTS JUST BEHIND THE BAR.

2. Pull the cage straight out.

1. Orient the card cage so that the expansion slots are at the left, as shown in Figure 6.

2. Identify the CPU board and the two memory boards.

   a) The CPU board has a brown lever on the right and a BLUE lever on the left. (See Figure 6, #1.)

   b) The memory boards have brown levers on the right and YELLOW levers on the left. (See Figure 6, #2.)

CAUTION: TOUCH THE METAL CHASSIS IN THE BACK OF THE LISA BEFORE HANDLING ANY BOARDS OR CHIPS. THIS IS TO PREVENT CHIP DAMAGE FROM STATIC ELECTRICITY THAT YOU MAY BE CARRYING.

Card Cage (Top View)

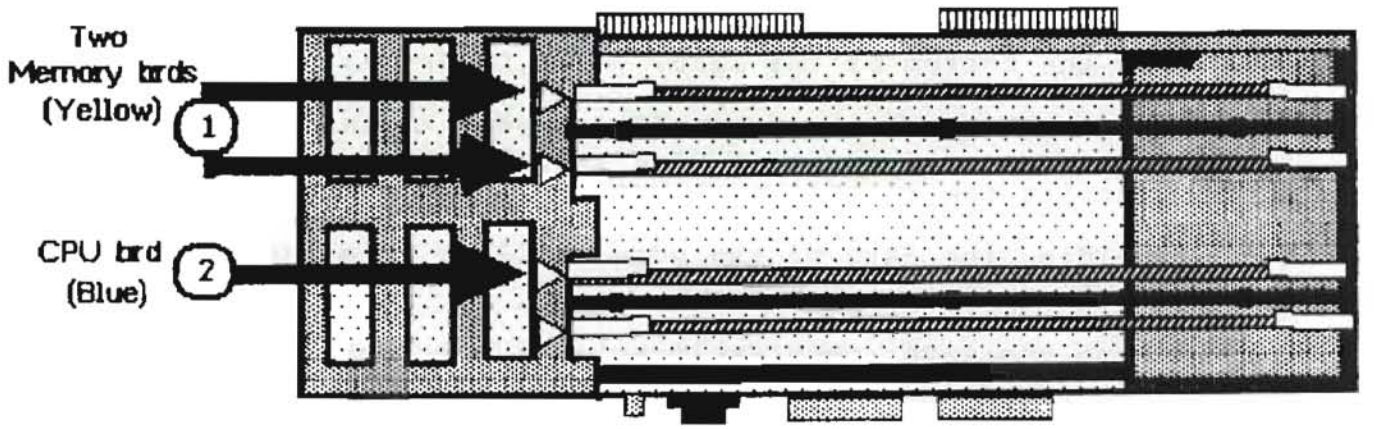

FIGURE 6

3. Place one thumb on either lever and simultaneously flip up the colored locking levers at the top of the CPU board.

4. Pull the board straight up, and remove it from the card cage.

5. Remove both memory boards the same way.

6. Slide the card cage (minus the CPU and memory boards) back into the Lisa.

   The cage will offer some resistance for the last 1/4 inch, while the cage connectors slide into their slots inside the Lisa. You might have to hold the frame with your fingers and press with your thumbs against the bottom of the cage.

7. Follow Steps a through d to replace the rear panel.

   a) Make sure that the metal prongs attached to the two thumbscrews are pointed to the left.

   b) Insert the tabs along the lower edge of the back panel into the slots at the base of the Lisa.

   c) Push the panel flat against the back of the Lisa.

   d) Turn the two thumbscrews clockwise until they are snug.

IMPORTANT: PEEL THE SERIAL NUMBER LABEL OFF THE LISA 1.0 (2.0) AND ATTACH IT TO THE 2/10 UNIT. IF ANYTHING SHOULD HAPPEN TO THE MACHINE ROM ON THE CPU BOARD, THIS SERIAL NUMBER WILL ENABLE APPLE TO REPALCE IT.

Installing Modules In the Lisa 2/10

Now that you have removed the necessary modules from the Lisa 1.0 (2.0), you can begin installing those modules inside the Lisa 2/10.

1. Remove the plastic pouch containing two ROMs that is taped to the top of the Lisa 2/10.

2. Remove the anti-static foam caps from both sides of the Lisa 2/10.

3. Place the anti-static foam caps on both sides of the Lisa 1.0 (2.0).

   Do not pack the Lisa 1.0 (2.0) inside the box yet.

Installing the Glare Filter

1. Remove the front panel from the Lisa 2/10. Set the panel on a flat surface, face down. Refer to the procedure (Removing the Front Panel) on page 3 of this manual if you need to.

2. Center the glare filter over the opening inside the front panel, with the raised side of the frame facing you.

   Hold the glare filter against the clip (see Figure 7, #1) along the upper edge of the front panel, at a 45 degree angle.

3. While pressing down on the frame (panel) at the upper clip, rotate the lower edge until the frame slides up under the upper clip (see Figure 7).

   Continue rotating the glare filter downward until it lies flat against the panel.

4. Push the lower edge of the glare filter in until it clears the lower clip, and let it slide into place under the clip.

5. Replace the front panel. Refer to the procedure (Replacing the Front Panel) on page 3 of this manual if you need to.

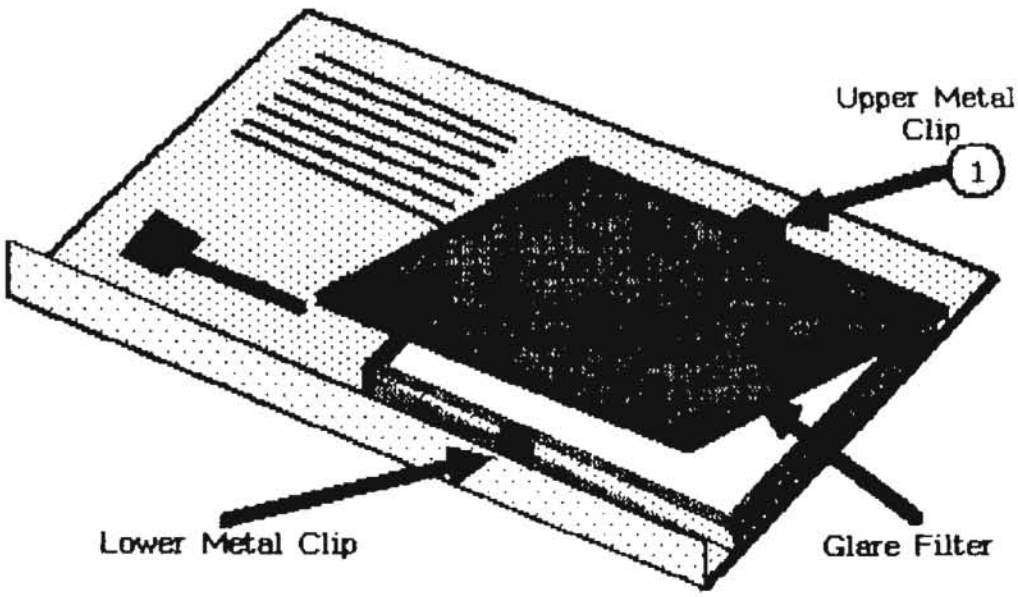

FIGURE 7

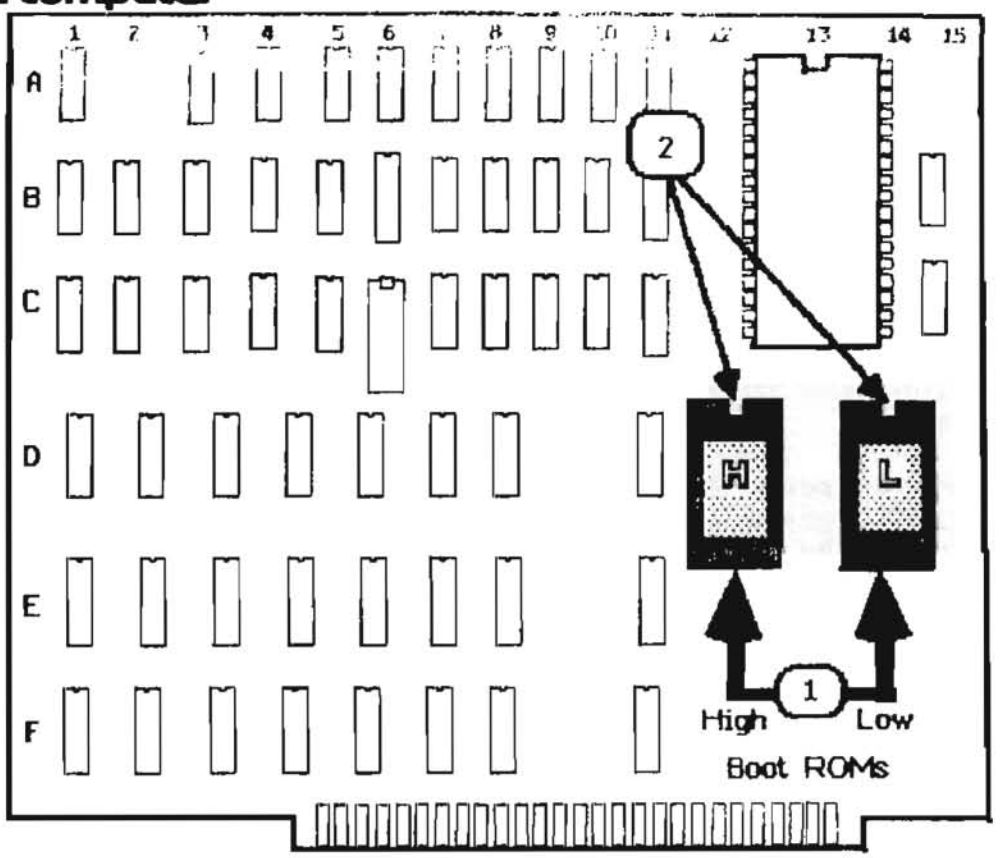

FIGURE 8

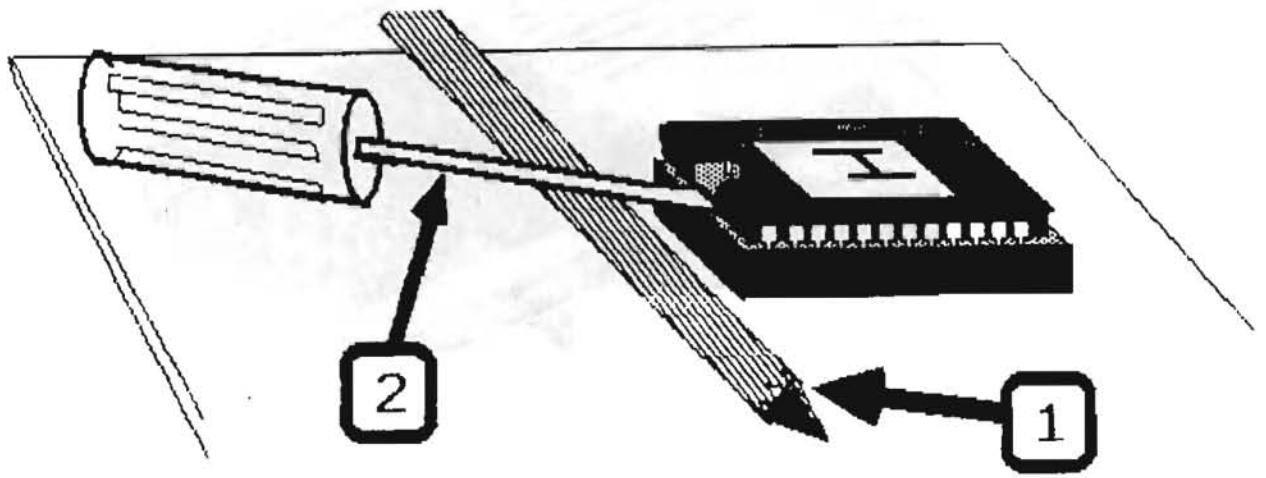

FIGURE 9

apple computer

Preparing the CPU Board for the Lisa 2/10

You must replace two ROMs (chips) on the CPU board before it can work inside the Lisa 2/10.

1. Locate the Boot ROMs on the CPU board (see Figure 8, #1).

2. Follow steps **a** through **d** to remove each of the two Boot ROMs.

   a) Lay a pencil across the CPU board directly in front the ROM (see Figure 9, #1).

   b) Lay a small to medium flatblade screwdriver over the pencil, and between the ROM and its socket (see Figure 9, #2).

   c) Using the pencil as a fulcrum, **gently** pry at one end, and then the other, until the ROM is loose enough to lift out of its socket.

   CAUTION: DO NOT ATTEMPT TO PRY THE ROM COMPLETLY OUT OF ITS SOCKET. YOU MAY DAMAGE THE CONNECTING PINS.

   d) Lift the ROM out of its socket and set it aside.

3. Remove the new Boot ROMs from the plastic pouch and pull them off of the foam pad.

4. Place the old Boot ROMs on the foam pad and push them in.

5. Place the foam pad, with the old Boot ROMs on it, back inside the plastic pouch.

6. Tape the plastic pouch to the top of the Lisa 1.0 (2.0) (between the foam side caps).

7. Pack the Lisa 1.0 (2.0) inside the box from which the Lisa 2/10 was removed. Do not close the box yet.

8. Follow steps a through d to install the two Boot ROMs on the CPU board.

   a) Orient the chip so that the notch (see Figure 8, #2) is facing the same direction as the notches on the surrounding chips.

   NOTE: The Low address ROM (labeled "L") goes into the socket nearest the right edge of the board. The high address ROM (lableled "H") goes into the socket located to the left of the low address ROM.

   b) With the chip at an angle, line the row of pins up with one side of the socket (see Figure 10, below).

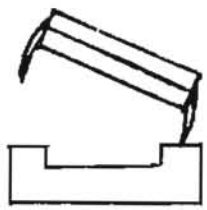

FIGURE 10

   c) Press down **gently**, but with enough force to bend the row of pins slightly, so that the other row of pins lines up with the other side of the socket.

   d) Press down firmly on the chip to make sure that it is securely seated.

5. Check closely to make sure that all the chip's pins are in the socket, and that none of the pins are bent under.

Installing the Cage Boards in the Lisa 2/10

1. Remove the rear panel from the Lisa 2/10 and set it aside. Refer to the procedure (Removing the Rear Panel) on page 5 of this manual if you need to.

2. Remove the card cage. Refer to the procedure (Removing the Card Cage) on page 5 of this manual if you need to.

3. Identify the CPU and memory board slots into which the boards will be inserted.

   All boards are installed with the brown locking lever on the right. The colored arrow on the card cage matches the color of the left tab on the board that goes in each slot.

   CAUTION: Handle the boards by the levers and plastic edges only.

4. If the colored levers on the board are not already in the up position, flip them up.

5. With the brown lever on the right, slide the board into the thin grooves in the card cage.

   You may have to center the bottom edge of the board in the slot. If so, touch only the plastic edge of the board. Do not touch the gold connector.

   The tabs on the CPU board should be resting in the notches along the top of the cage.

   The tabs on the memory boards should be resting on the black plastic frame.

6. Push down on the levers simultaneously to lock the board into place.

   If this requires excessive force, check to see that the gold connector along the bottom of the board is aligned over the slot.

   At this point, the lower part (rounded end) of the levers should be set in the lower notches on the plastic card cage.

7. Slide the card cage back into the Lisa. The cage may offer some resistance for the last 1/4 inch, while the cage connectors slide into their slots inside the Lisa. You might have to hold the frame with your fingers and press with your thumbs against the bottom of the cage.

Installing Expansion Cards in the Lisa 2/10

NOTE: YOU MUST INSTALL A PARALLEL EXPANSION CARD IN ORDER TO CONNECT THE PROFILE TO THE LISA 2/10.

1. Pull out the metal lever extending from the plastic cap at the bottom of the card slot. Refer to Figure 4 on page 4 of this manual if you need to.

2. Turn the lever clockwise 90 degrees, to the 3 o'clock position.

3. Hold the expansion card by the metal edge, with the green plastic facing right and the white cover facing left. Insert the bottom of the card into the connector slot and the top of the card into the plastic slot at the top of the cage. Slide the card into the cage as far as it will go.

4. Turn the metal lever counterclockwise 90 degrees, back to the 12 o'clock position. If you encounter too much resistance while turning the lever, use a pair of pliers.

5. Push the lever back into the plastic cap.

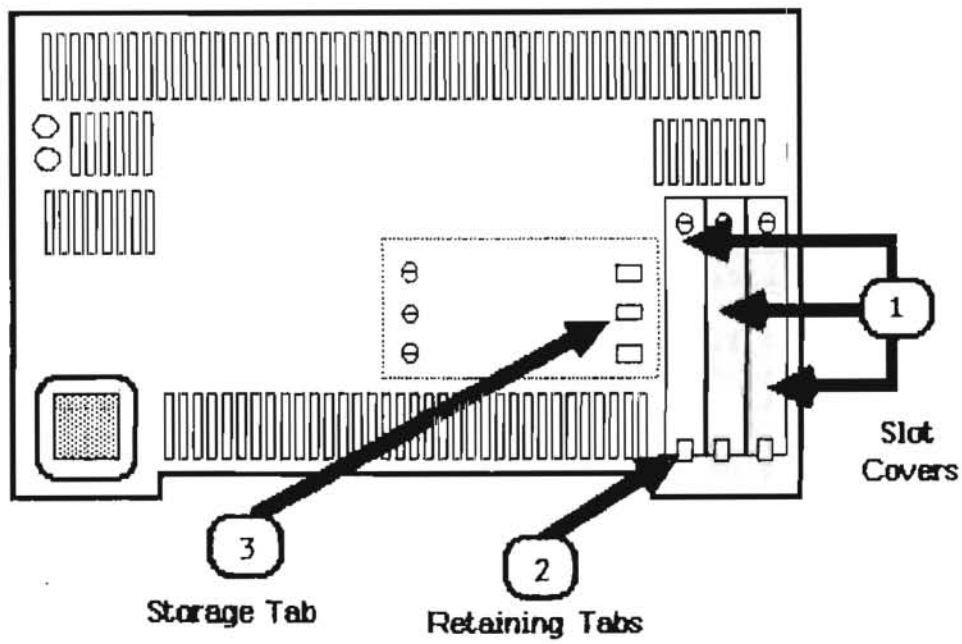

FIGURE 11

6. The slot covers (see Figure 11, #1) on the inside of Lisa's back panel block the electromagnetic emissions from inside the Lisa. If you have just installed any expansion cards, follow steps a through d to remove the cover that protects that slot.

   a) On the inside of the rear panel, locate the slot cover for the card(s) you have just installed.

   b) Remove the screw at the top of the slot cover.

   c) Pull the slot cover out from behind the retaining tab (see Figure 11, #2).

   d) Slide the slot cover behind the storage tab (see Figure 11, #3) and, using the screw previously removed, secure the other end of the slot cover.

7. Replace the rear panel. Refer to Step 6 on Page 7 of this manual if you need to.

8. Connect the AC cord in the back of the Lisa 2/10 and plug it into the wall outlet.

9. Connect the ProFile to the Lisa 2/10 and plug it into the wall outlet.

10. Connect the keyboard, mouse, and any other peripherals to the Lisa 2/10.

11. Remove the Office System manual, and the Office System diskettes from the smaller box. Follow the Office System Installation procedures to install your new Office System onto the Lisa 2/10 internal hard disk.

    When you finish installing all of the 3.0 software applications, place the old 1.0 or 2.0 Office System diskettes in the box with the Lisa 1.0 (2.0). Close the box, and return it to the Apple Support Center.

Lisa/Macintosh XL Upgrade and Retrofit

Section 4

Macintosh XL Screen Modification Kit

Contents:

Installing the Screen Kit
  Replacing the ROMs.....4.3
  Installing the Transformer.....4.5
  Video Adjustments.....4.7
Hard Disk Install.....4.9
Current Repair Strategy.....4.13

CAUTION: THE USER WILL NO LONGER BE ABLE TO USE ANY LISA® SOFTWARE UPON COMPLETION OF THIS INSTALLATION!

©Apple Computer, Inc., 1985.
No part of this document may be reproduced in any form without the written permission of Apple Computer, Inc.

Macintosh is a trademark of McIntosh Laboratory, Inc., and is used by Apple Computer, Inc., with its express permission. Apple, the Apple logo, and Lisa are registered trademarks of Apple Computer, Inc.

CPU BOARD

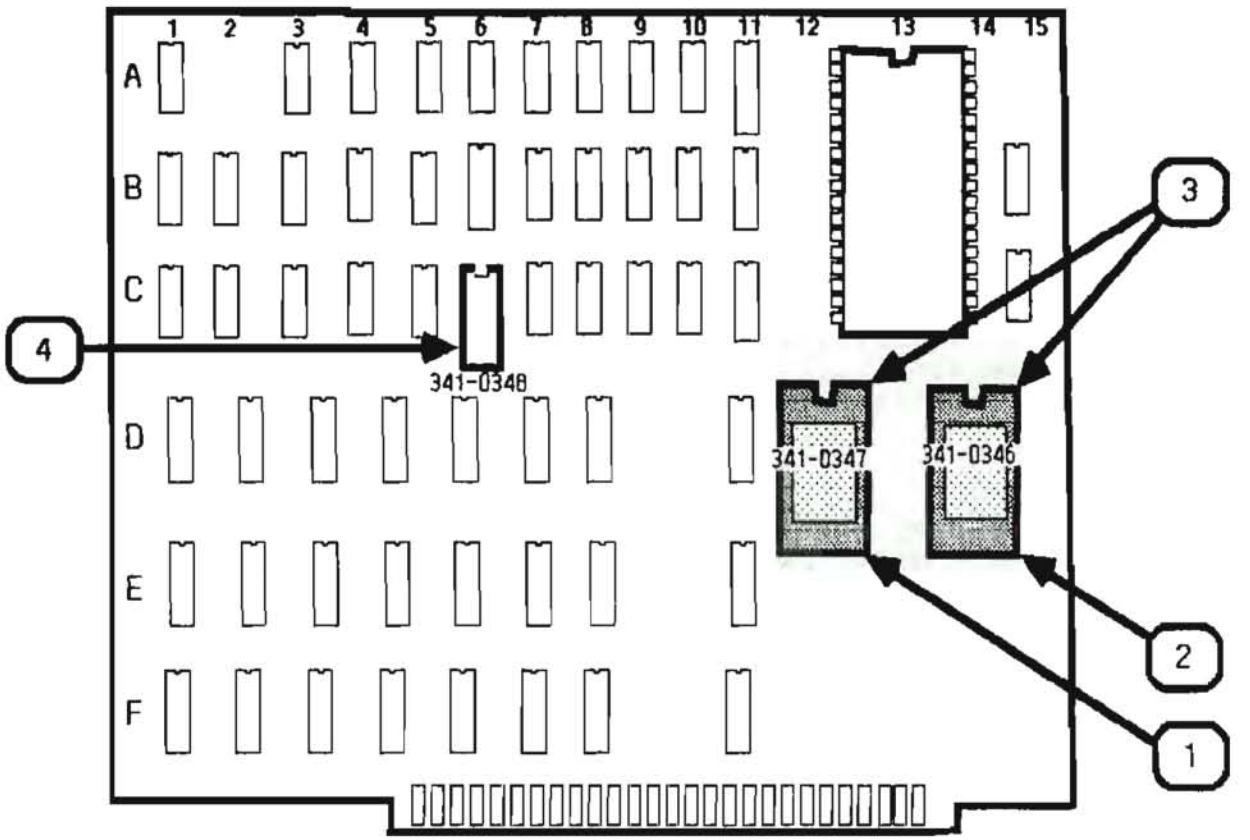

FIGURE 1

INSTALLING THE SCREEN KIT

Replacing the ROMs

1. Turn to Section 1 - "Take-Apart" of the Lisa 2 Technical Procedures.

2. Follow the procedures listed under:

   a) "Removing the Front Panel"

   b) "Removing Rear Panel"

   c) "Removing the Card Cage"

   IMPORTANT: Do step **d**, below, to remove only the CPU board (identified by the blue and brown levers).

   d) "Removing Boards" (from the card cage)

3. Follow steps **a** through **e** to replace the two boot ROMs and the video state machine ROM.

   a) Use an IC puller to remove the two boot ROMs (Figure 1, #1 & 2) from the CPU board.

   CAUTION: When installing ROMs be sure to orient them so that the notches (Figure 1, #3) are facing the same direction as the notches on the surrounding chips.

   b) Remove the new 28-pin ROM (P/N 341-0347) from the anti-static bag and carefully insert it into the socket at location 13-D (Figure 1, #1).

   c) Remove the new 28-pin ROM (P/N 341-0346) from the anti-static bag and insert it into the socket at location 14-D (Figure 1, #2).

   d) Use an IC puller to remove the 20-pin video state machine ROM at location 6-C (Figure 1, #4).

   e) Remove the new video state machine ROM (P/N 341-0348) from the anti-static bag and insert it into the socke at location 6-C (Figure 1, #4).

4. Replace the CPU board by following the steps listed unde "Installing Boards" in the Lisa 2 Technical Procedures binder. Do not replace the card cage.

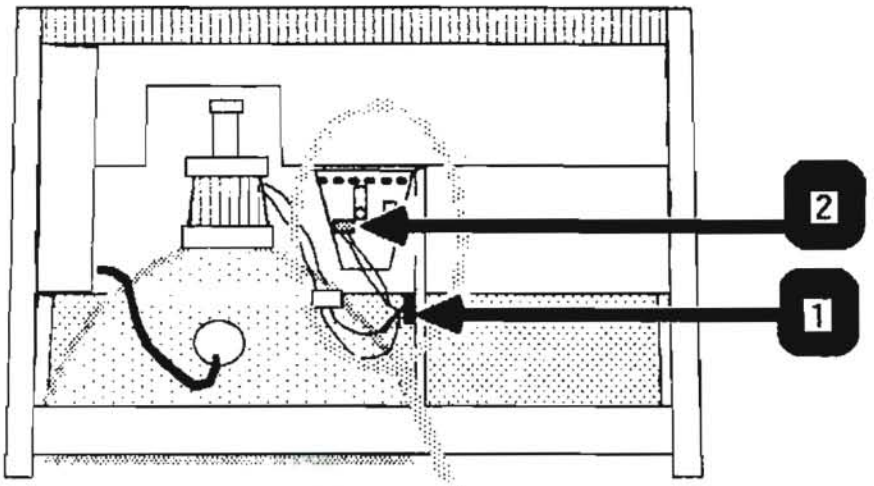

FIGURE 2

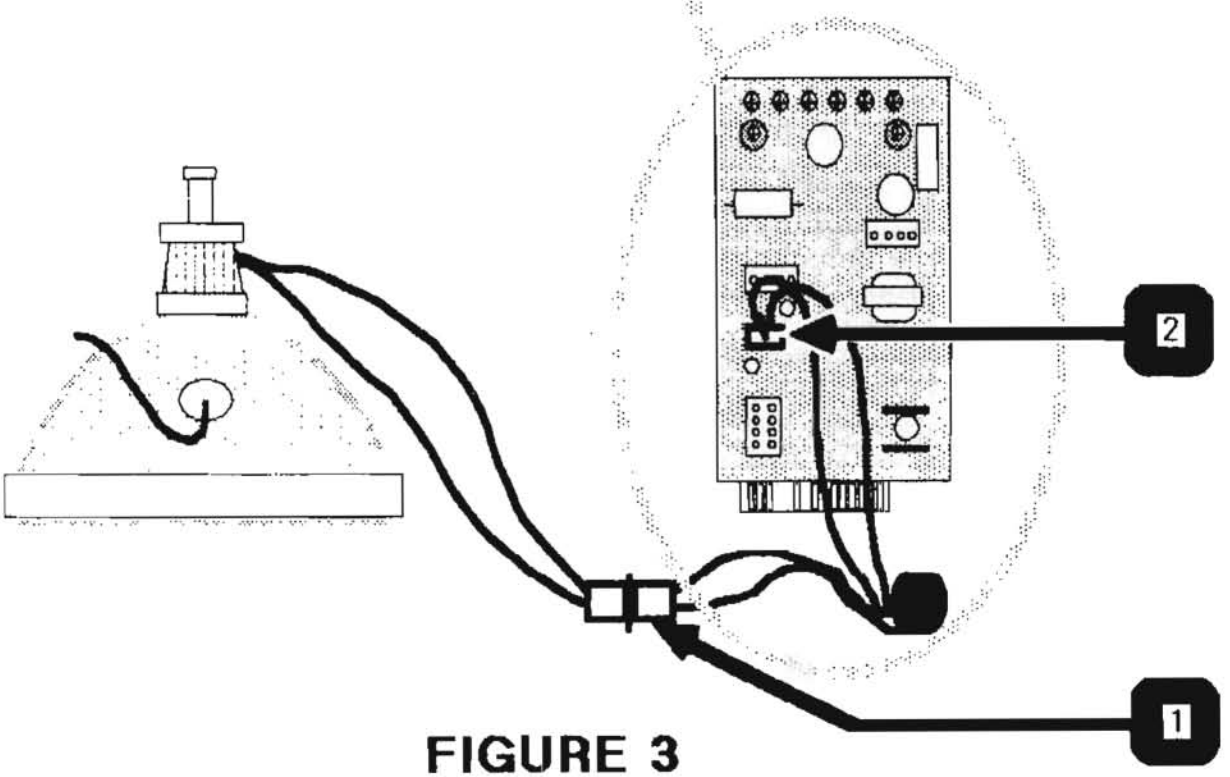

FIGURE 3

Installing the Transformer

1. Turn to the Section 3 "Video Take-apart" of the Lisa 2 Technical Procedures.

2. Carefully read through the "Safety Precautions".

3. Follow the steps listed under "Discharging the CRT".

4. Clean the section of the video chamber wall where the transformer (Figure 2, #1) will be attached. This is the section adjacent to the disk drive chamber.

5. Disconnect the yoke connector (green and yellow wire) from P2 (Figure 3, #2) on the video board.

6. Connect the yoke (green and yellow) connector to the male socket attached to the transformer. (See Figure 3, #1.) There is only one way it will fit.

7. Connect the female transformer connector to P2 (Figure 3, #2) on the video board.

8. Peel the protective paper off the adhesive tape at the bottom of the transformer.

9. Press the bottom of the transformer firmly to the side (cleaned section) of the video chamber wall. (See Figure 2, #1.)

   Make sure there is no tension on the transformer cables.

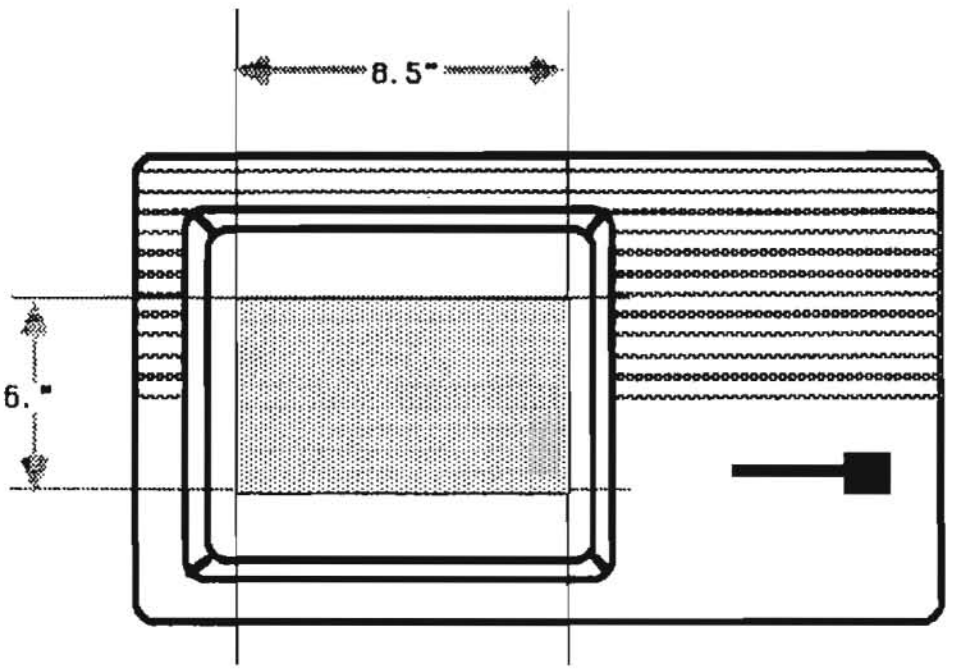

FIGURE 4

1. Clip the anode cap into the CRT.

2. Turn the Lisa so that the back is facing you.

3. Slide the card cage back into the Lisa.

   The card cage will offer some resistance for the last 1/4 inch, while the cage connectors slide into their slots inside the Lisa 2. You might have to hold the frame with your fingers and press with your thumbs against the bottom of the cage.

4. Replace the rear panel. See Section 1 of the Lisa 2 Technical Procedures, "Replacing the Rear Panel".

5. Replace the front panel. See Section 1 of the Lisa 2 Technical Procedures, "Replace the Front Panel".

   NOTE: Do not replace the top yet. You will need to access the video board to make adjustments.

Video Adjustments

1. Connect the power cord and mouse. Turn on the Macintosh™ XL computer.

THE FINAL ADJUSTMENTS REQUIRE THAT THE RASTER BE APPROXIMATELY 6.0 INCHES IN HEIGHT, AND 8.5 INCHES IN WIDTH.

2. When the raster (screen image) comes into view, use a flexible ruler to measure the width of the raster.

   a) Adjust the width potentiometer (on the video board) until the picture is approximately 8.5 inches wide. (See Figure 4.)

3. Measure the height of the raster.

   a) Adjust the height potentiometer until the picture is approximately six inches in height. (See Figure 4.)

4. Check the width and height again. Readjust the potentiometers if necessary.

5. Follow these steps to adjust the horizontal phase:

   NOTE: The horizontal phase adjustment must be done when the Macintosh XL is cold. If the system has been on for more than two minutes, turn it off and wait 20 minutes before adjusting the horizontal phase.

   a) Locate the horizontal phase pot on the video board.

   b) Turn the horizontal phase pot fully counterclockwise.

   c) If a white line (band) appears at the right edge of the screen, slowly turn the phase pot clockwise until the white line completely disappears.

      Once the white line disappears, do not turn the pot any further clockwise.

6. Center the picture by turning the centering rings (Figure 5, #1) attached to the CRT yoke.

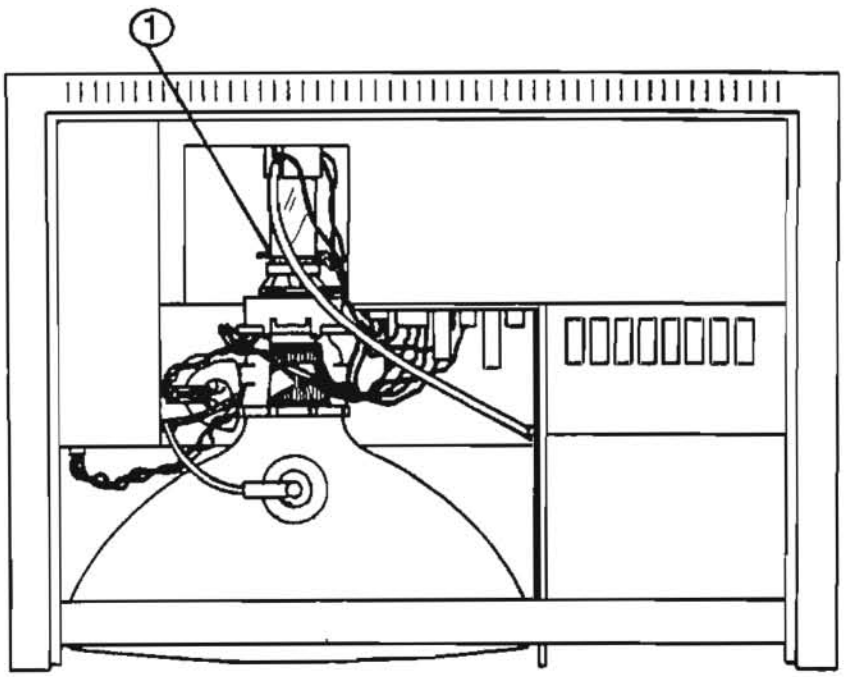

FIGURE 5

HARD DISK INSTALL

MacWorks is the Macintosh environment for the Macintosh XL. The Hard Disk Install application enables you to access the internal hard disk upon turning on the Macintosh XL.

CAUTION: PERFORMING THIS PROCEDURE WILL ERASE ALL DATA ON THE HARD DISK.

1. Remove the two diskettes from the package.

2. Turn off the Macintosh XL.

3. Insert the MacWorks diskette.

4. Power up the Macintosh XL. When you hear the first click (when the four boot ROM icons are on the screen but have not yet all been checked off) hold down the **APPLE** key and press **2** on the alphanumeric keyboard.

   The screen will appear (white, then gray) and the disk drive will eject the MacWorks diskette.

5. Insert the MacWorks System disk into the drive.

   A few seconds later, the MacWorks System diskette icon will appear (already selected) at the upper right corner of the screen.

6. Position the pointer over the word **FILE** at the upper left hand corner of the screen. Press mouse button to pull down the file window. Hold the mouse button down as you drag the pointer downward to select **OPEN**.

   The MacWorks system diskette icon should open as shown in the diagram below.

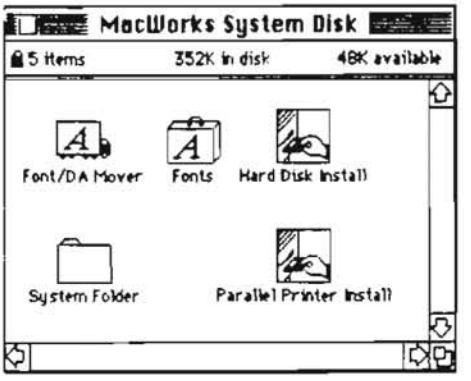

7. Position the pointer over the Hard Disk Install icon and press the mouse button to select it.

8. Pull down the **FILE** menu and select **OPEN**.

   If the hard disk contains any Lisa software, a message box will appear, telling you that this is not a Macintosh disk. Select **ERASE** to initialize the hard disk.

   If the hard disk already contains the Macintosh environment, a message box will appear telling you that MacWorks has already been installed. Select **UPDATE MACWORKS** so that you will not erase any Macintosh files on the hard disk.

   The following message box will appear.

9. Position the pointer over the box marked **OK** and click the mouse button to accept the default.

   The system will eject the MacWorks System diskette, then ask you to insert the MacWorks diskette.

10. Insert the MacWorks diskette.

    The hard disk will copy the Macintosh environment. You will then be asked to insert the System disk.

11. Insert the MacWorks System Disk.

    If MacWorks has previously been installed (you are updating the files), then open the MacWorks System Disk and **GO TO STEP 14.**

    If MacWorks has not previously been installed, an instruction box will appear asking you to name the hard disk.

12. Click the mouse button over the box marked **OK.**

    You will see a message telling you that the hard disk installation has been successfully completed, and that you should copy the system folder to the hard disk.

13. Click the mouse button over the box marked **OK.**

    The hard disk icon and the MacWorks System Disk should appear on the screen. The system disk will be open as shown in the diagram below.

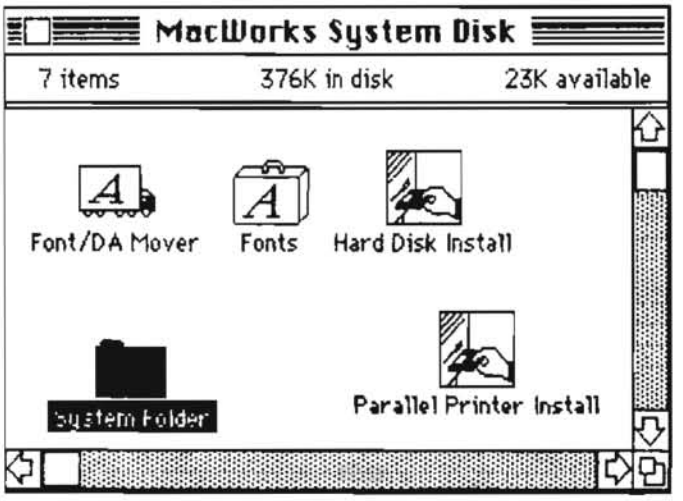

14. Position the pointer over the System Folder icon located inside the MacWorks System Disk window. Hold down the mouse button while you drag the system folder over the hard disk icon. Release the mouse button.

    The System Folder will be copied onto the hard disk.

15. Position the pointer over the small Apple icon at the upper left corner of the screen. Press and hold the mouse button as you drag the pointer downward to select **CONTROL PANEL.**

    The control panel will appear as shown in the diagram below.

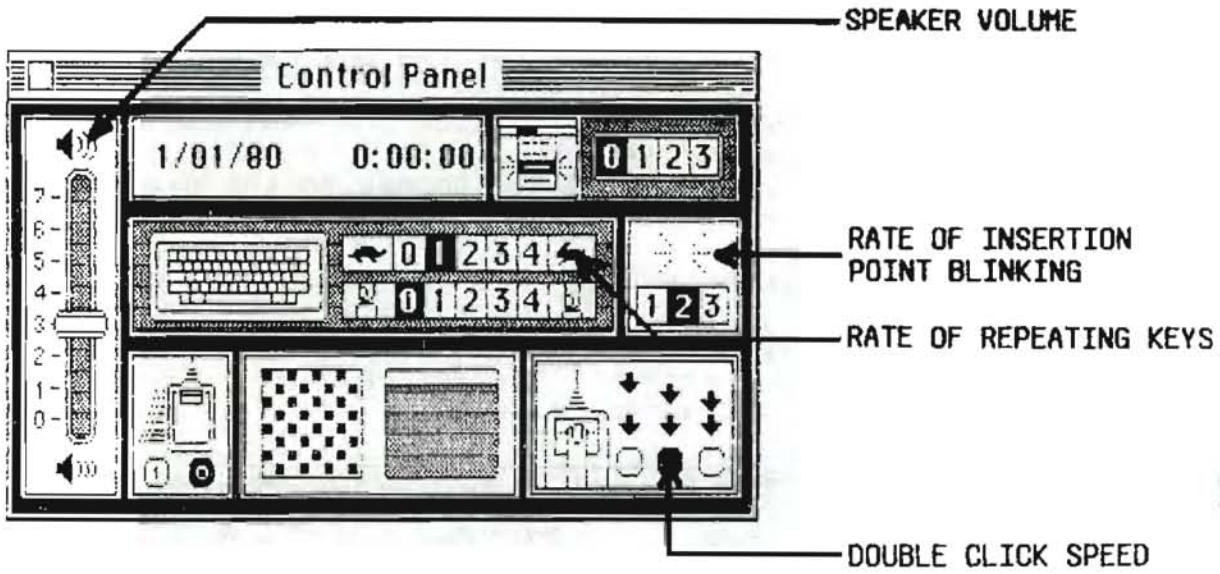

IN THE FOLLOWING STEPS YOU WILL SET PREFERENCES FOR SPEAKER VOLUME, RATE OF INSERTION POINT BLINKING, RATE OF REPEATING KEYS, AND DOUBLE CLICK SPEED. (REFER TO THE CONTROL PANEL DIAGRAM.)

16. Locate the **speaker volume** section of the control panel. Position the pointer over the knob and hold the mouse button down while you drag the knob up to the number 3.

17. Select number 2 inside the **Rate of Insertion Point Blinking** section of the control panel.

18. Select number 1 in the **Rate of Repeating Keys** section.

19. Select the middle box located in the **Double-Click Speed** section.

20. Pull down the **FILE** menu and select **EJECT** to eject the MacWorks System Disk.

21. Turn off the power.

22. When the power lamp (inside the power switch) turns off turn the system back on.

    The hard disk will step through its self-diagnostic test. The hard disk icon will appear at the upper right corner of the screen.

23. Place the pair of MacWorks diskettes back inside the holder. Give the diskettes and the MacWorks manual to the customer.

CURRENT REPAIR STRATEGY FOR A MODIFIED MACINTOSH XL

The current Lisa 2/Macintosh XL diagnostic diskette (Lisa/Macintosh XL Test) cannot be used with a modified system. A new diagnostic is available for systems with the Macintosh Screen Kit installed. It is called the Macintosh XL Modified Screen Test. It is functionally identical to LisaTest (described in Section 5 under the Lisa 2 tab in this binder).

apple computer

LISA/MACINTOSH XL ILLUSTRATED PARTS LISTS

TABLE OF CONTENTS

Section 1. Lisa 1.0 Illustrated Parts List

Chassis 3.....1.1
Top Assembly.....1.3
Video Assembly.....1.5
Chassis 1.....1.7
Disk Drive Assembly.....1.9
Card Cage.....1.11
CPU Board.....1.13
I/O Board.....1.15

Section 2. Lisa 2 Illustrated Parts List

Front Bezel.....2.1
Top Assembly.....2.3
Chassis 4.....2.5
Video Assembly.....2.7
Chassis 2.....2.9
Chassis 1.....2.11
Disk Drive Assembly.....2.13
Card Cage.....2.15
CPU Board.....2.17
I/O Board.....2.19

Section 3. Macintosh XL Illustrated Parts List

Front Bezel.....3.1
Top Assembly.....3.3
Chassis 4.....3.5
Video Assembly.....3.7
Chassis 2.....3.9
Chassis 1.....3.11
Disk Drive Assembly.....3.13
Card Cage.....3.15
CPU Board.....3.17
I/O Board.....3.19

©Apple Computer, Inc., 1985.
No part of this document may be reproduced in any form without the written permission of Apple Computer, Inc.

Apple and the Apple logo are registered trademarks of Apple Computer, Inc.

apple computer

Lisa 1.0 Technical Procedures

Section 1

Illustrated Parts List

The figures and lists below include all piece parts that can be purchased separately from Apple for the Lisa 1.0, along with their part numbers. These are the only parts available from Apple. Refer to your Apple Service Programs manual for prices.

Contents:

Chassis 3 ..... 1.1
Top Assembly 1.3
Video Assembly 1.5
Chassis 1 ..... 1.7
Disk Drive Assembly 1.9
Card Cage 1.11
CPU Board 1.13
I/O Board 1.15

NOTE: UNLESS OTHERWISE SPECIFIED

1. MANUAL REFERENCE: 072-0085

REV	ZONE	ECO #	REVISION	APPD
A		5493	INITIAL RELEASE	

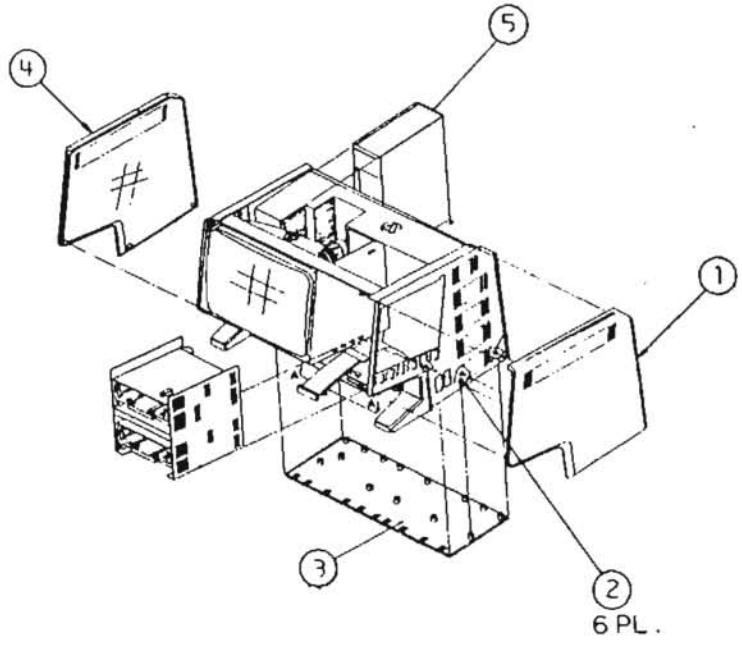

Figure 1

METRIC

apple computer inc.

NOTICE OF PROPRIETARY PROPERTY

THE INFORMATION CONTAINED HEREIN IS THE PROPRIETARY PROPERTY OF APPLE COMPUTER, INC. THE POSSESSOR AGREES TO THE FOLLOWING:

(a) TO MAINTAIN THIS DOCUMENT IN CONFIDENCE
(b) NOT TO REPRODUCE OR COPY IT
(c) NOT TO REVEAL OR PUBLISH IT IN WHOLE OR PART

TITLE: ILLUSTRATED PARTS LIST LISA 1

SIZE: B | DRAWING NUMBER: 070-0183-A | SHT: 1/8

SCALE: N/A

DRAWING NUMBER: 070-0183-A | SHT: 1/8

apple computer

LISA 1.0 CHASSIS 3 (Figure 1)

Item	Part No.	Description
1	815-4073	Right Side Plastic
2	430-3001	Bottom Pan Screw, Tap 6-20x0.375
3	815-4090	Bottom Pan
4	815-4074	Left Side Plastic
5	661-93108	Lisa 1.0/2.0 Power Supply

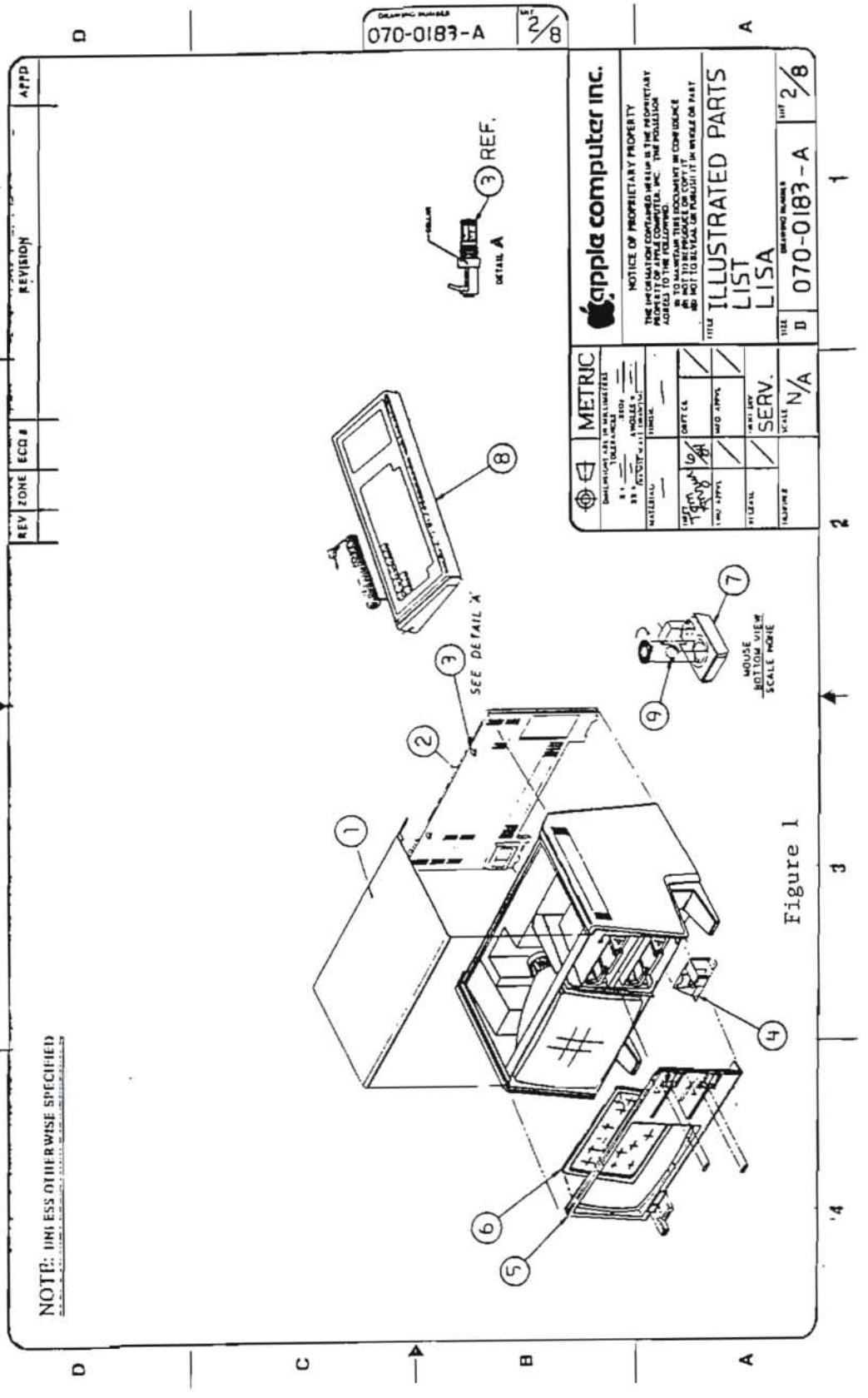
070-0183-A
2/8
REV
ZONE
ECO #
REVISION
APPD
apple computer inc.
NOTICE OF PROPRIETARY PROPERTY
METRIC
TITLE ILLUSTRATED PARTS LIST LISA
SIZE D
070-0183-A
SHT 2/8
SCALE N/A
SERV.
DETAIL A
REF.
SEE DETAIL 'A'
MOUSE
BOTTOM VIEW
SCALE FULL
NOTE: UNLESS OTHERWISE SPECIFIED

Figure 1

apple computer

LISA 1.0 TOP ASSEMBLY (Figure 2)

Item	Part No.	Description
1	815-4075	Top Cover Plastic
2	620-5105	Subassembly, Back
3	830-0051	Fastener, 1/4 Turn
4	076-0104	Lisa/Macintosh XL Soft Switch Assembly
5	620-5127	Lisa 1.0 Bezel Subassembly
6	620-6112	Glare Screen Assembly
7	661-93111	Lisa Mouse
8	661-93109	Lisa/Macintosh XL Keyboard
9	699-8001	Rubber Coated Mouse Ball

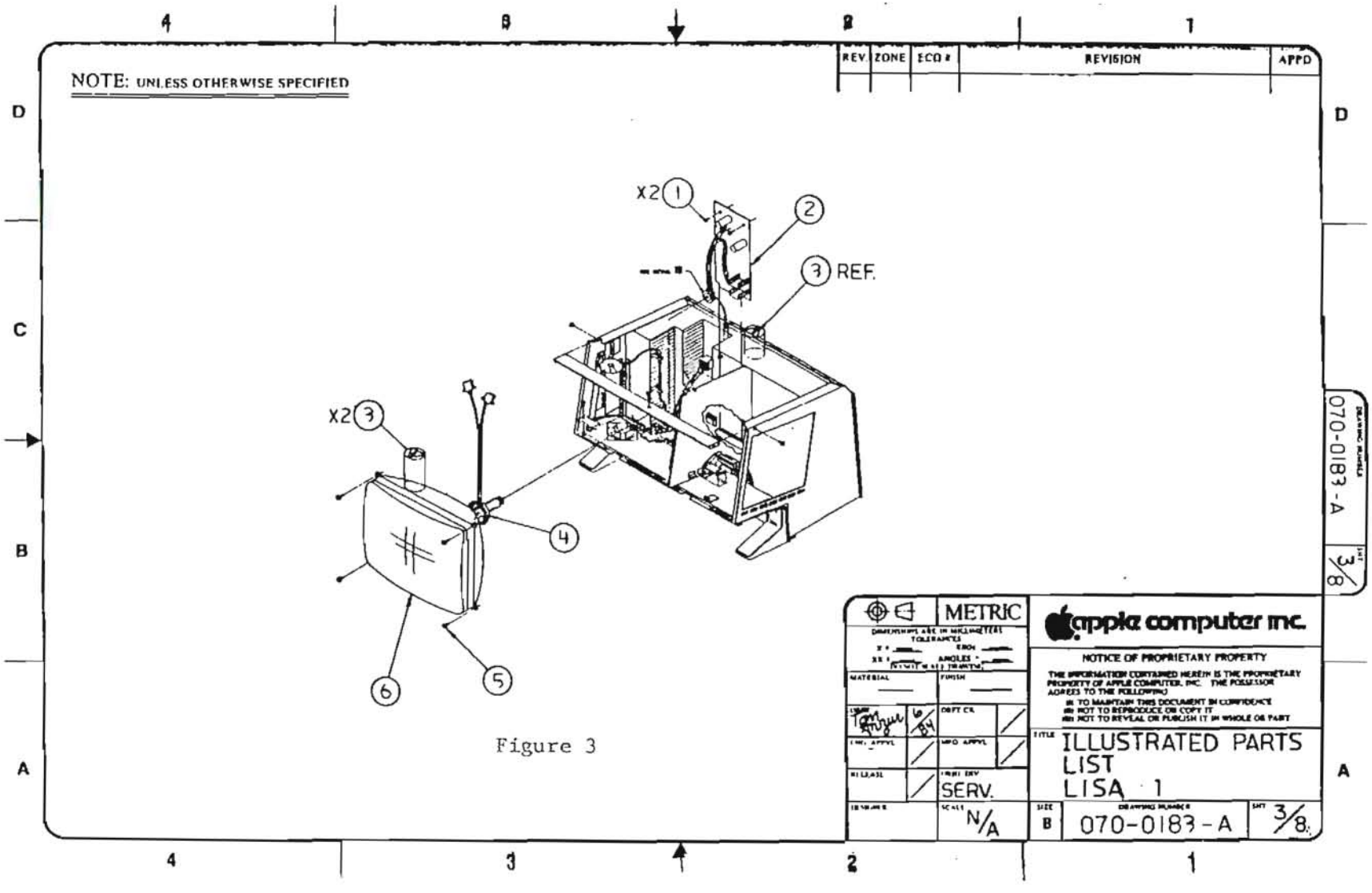
NOTE: UNLESS OTHERWISE SPECIFIED
REV
ZONE
ECO #
REVISION
APPD
X2 (1)
(2)
(3) REF.
X2 (3)
(4)
(5)
(6)
070-0183-A
3/8
METRIC
apple computer inc.
NOTICE OF PROPRIETARY PROPERTY
THE INFORMATION CONTAINED HEREIN IS THE PROPRIETARY PROPERTY OF APPLE COMPUTER, INC. THE POSSESSOR AGREES TO THE FOLLOWING:
(1) TO MAINTAIN THIS DOCUMENT IN CONFIDENCE
(2) NOT TO REPRODUCE OR COPY IT
(3) NOT TO REVEAL OR PUBLISH IT IN WHOLE OR PART
TITLE
ILLUSTRATED PARTS LIST
LISA 1
SERV.
N/A
SIZE B
070-0183-A
3/8

Figure 3

apple computer

LISA 1.0 VIDEO ASSEMBLY (Figure 3)

Item	Part No.	Description
1	400-1603	Video Board Screw, 6-32x3/16
2	661-93107	Lisa/Macintosh XL Video Board
3	825-4002	Label, Danger
4	159-0015	Magnet, Yoke Trim
	159-0020	Magnet, Yoke, Yellow
	159-0021	Magnet, Yoke, Red
	159-0022	Magnet, Yoke, Green
	159-0023	Magnet, Yoke, Blue
5	450-0020	Serrated Washer CRT 8-32x0.375
6	076-0105	Lisa/Macintosh XL CRT Yoke Assembly

NOTE: UNLESS OTHERWISE SPECIFIED

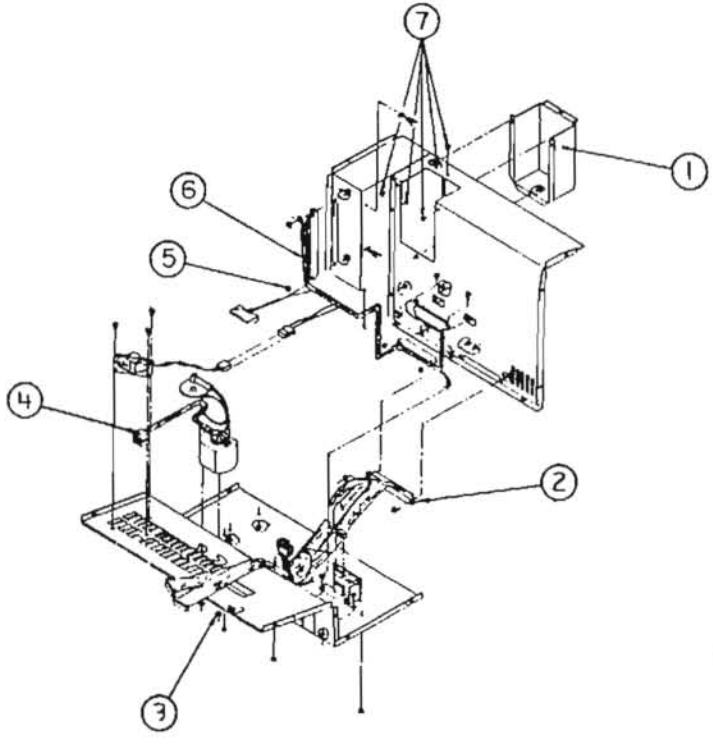

Figure 4

REV	ZONE	ECO #	REVISION	APPD

METRIC

apple computer inc.

NOTICE OF PROPRIETARY PROPERTY

THE INFORMATION CONTAINED HEREIN IS THE PROPRIETARY PROPERTY OF APPLE COMPUTER, INC. THE POSSESSOR AGREES TO THE FOLLOWING:
(i) TO MAINTAIN THIS DOCUMENT IN CONFIDENCE
(ii) NOT TO REPRODUCE OR COPY IT
(iii) NOT TO REVEAL OR PUBLISH IT IN WHOLE OR PART

TITLE: ILLUSTRATED PARTS LIST LISA 1

SERV

SCALE: N/A

SIZE: B

DRAWING NUMBER: 070-0183-A

SHT: 4/8

LISA 1.0 CHASSIS 1 (Figure 4)

Item	Part No.	Description
1	805-4008	CRT Cup
2	591-0002	Cable Assembly, Disk Drive, Lisa 1.0/2.0
3	835-0181	Nut/Washer Assy, M3 0.5, Lisa/Macintosh XL Flyback
4	076-0106	Lisa/Macintosh XL Flyback Transformer
5	835-0150	Nut/Washer Assy, Card Cage Chamber
6	591-0003	Cable Assembly, Power, Lisa 1.0
7	400-1603	Video Board Screw, 6-32x3/16

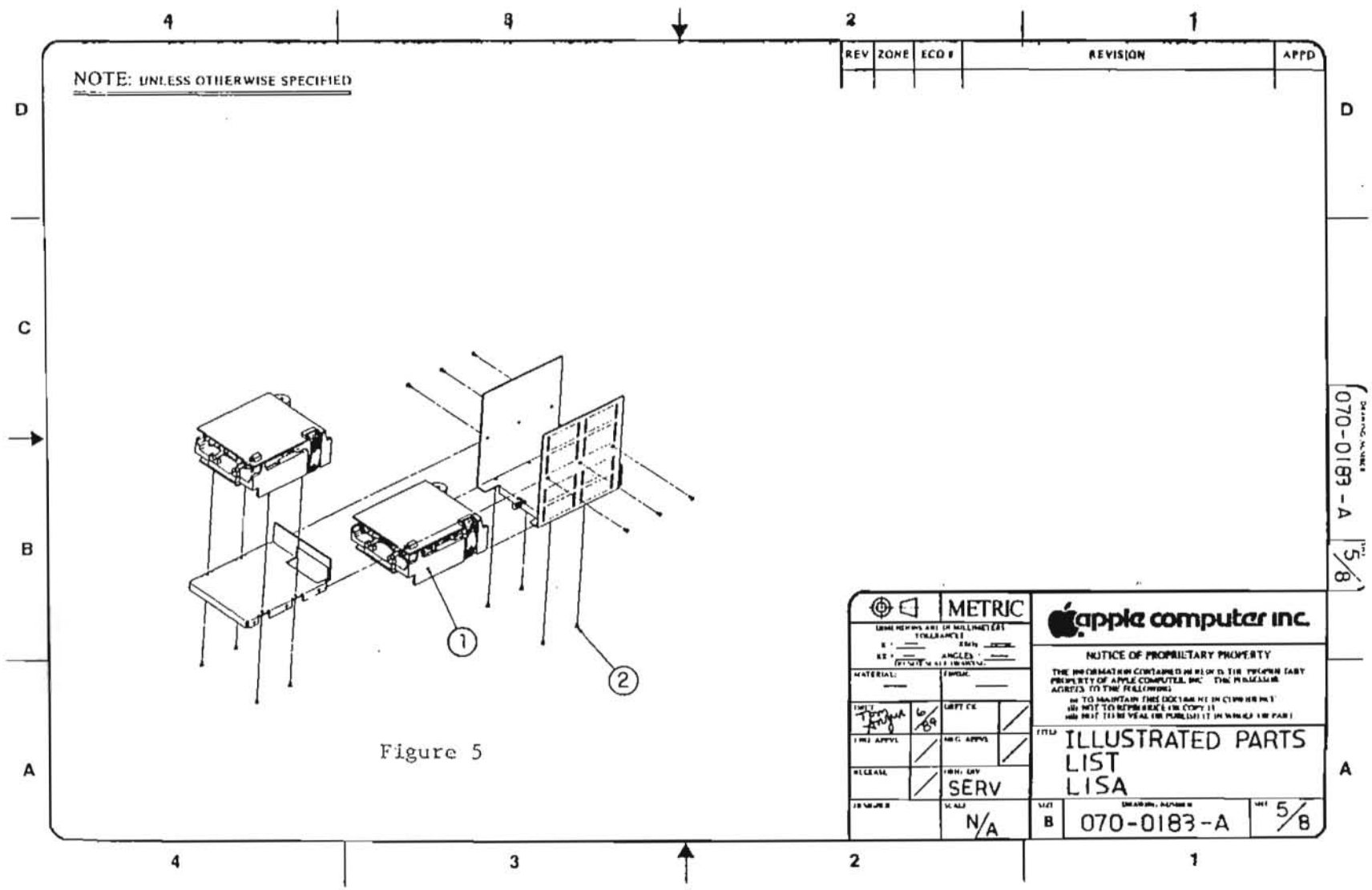
NOTE: UNLESS OTHERWISE SPECIFIED
REV
ZONE
ECO #
REVISION
APPD
METRIC
apple computer inc.
NOTICE OF PROPRIETARY PROPERTY
ILLUSTRATED PARTS LIST
LISA
SERV
N/A
B
070-0183-A
5/8
070-0183-A
5/8
1
2

Figure 5

LISA 1.0 DISK DRIVE ASSEMBLY (Figure 5)

Item	Part No.	Description
1	661-93110	Lisa 1.0 Drive Module
2	400-3604	Disk Drive Screw, 6-32x1/4

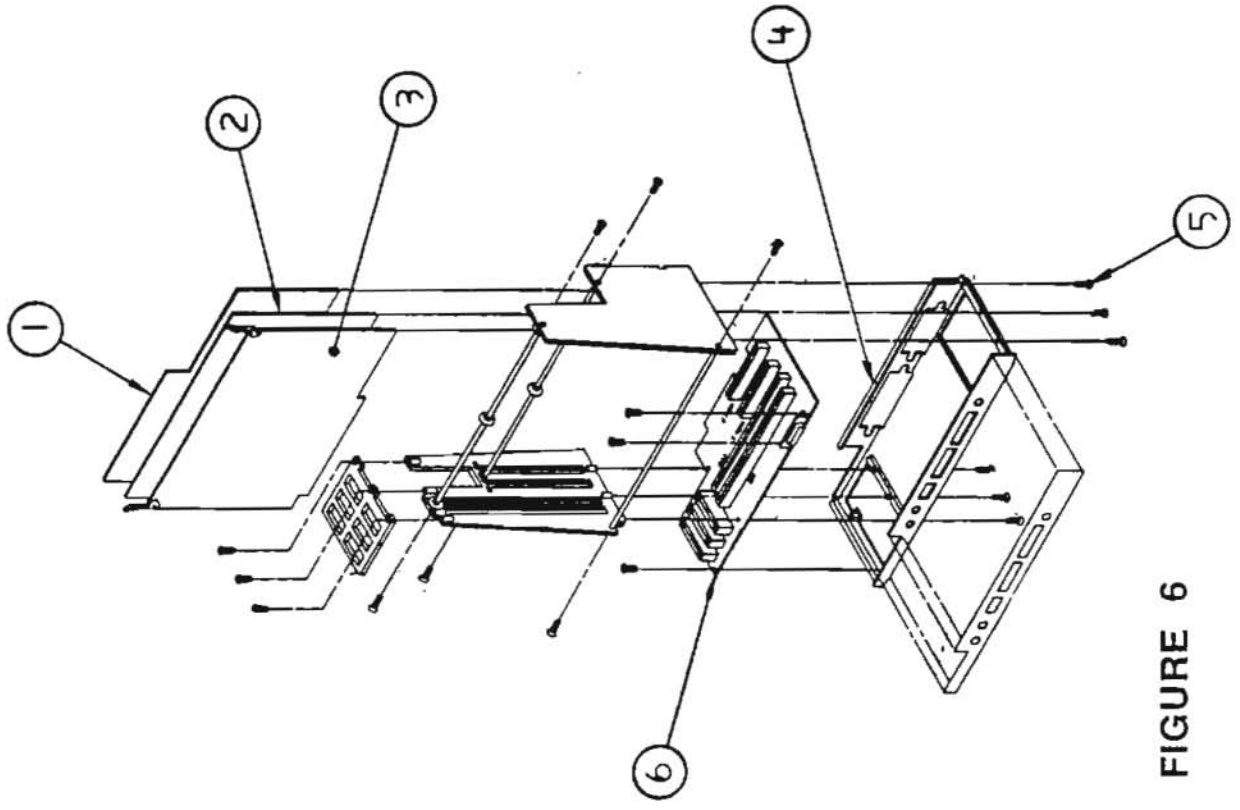

FIGURE 6

LISA 1.0 CARD CAGE (Figure 6)

Item	Part No.	Description
1	661-93105	Lisa/Macintosh XL Memory Board
2	661-93103	Lisa/Macintosh XL CPU Card
3	661-93104	Lisa 1.0 I/O Board
4	805-4046	Lisa 1.0/2.0 Card Cage Chassis
5	400-1405	Card Cage Screw, 4-40 x 5/16
6	661-93106	Lisa 1.0/2.0 Motherboard

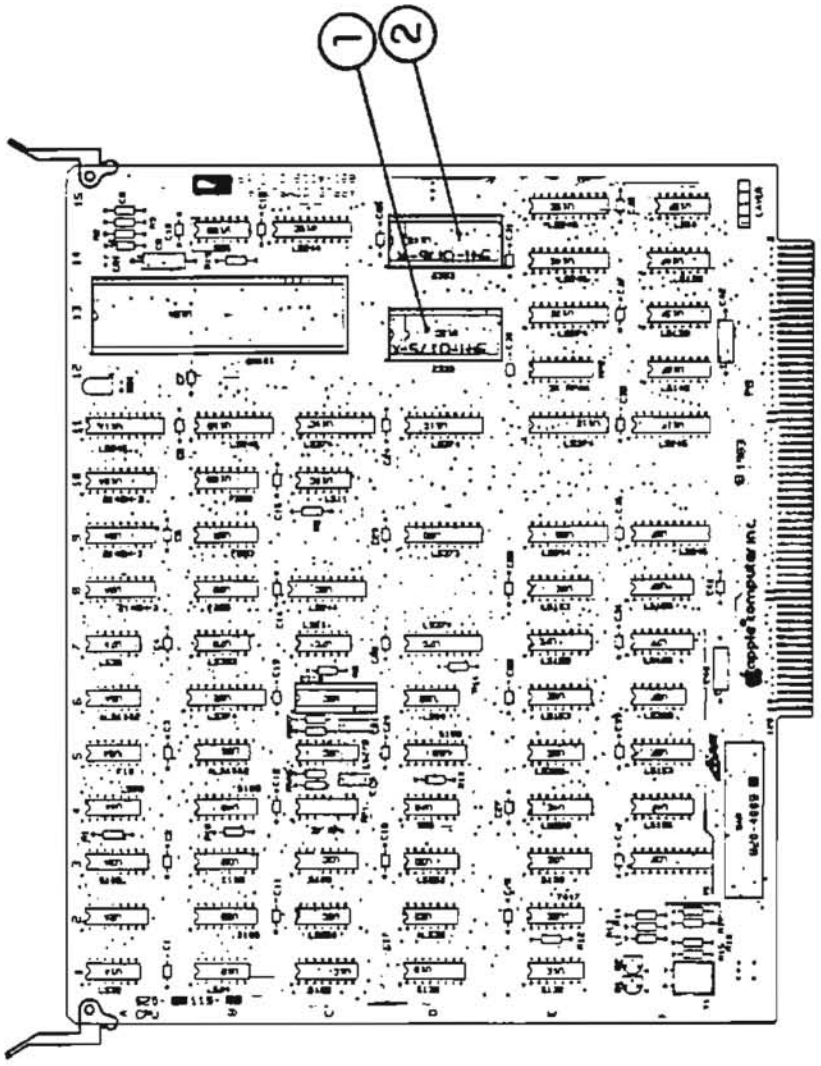

FIGURE 7

LISA CPU BOARD (Figure 7)

Item	Part No.	Description
1	341-0175	Boot ROM, High 64K
2	341-0176	Boot ROM, Low 64K

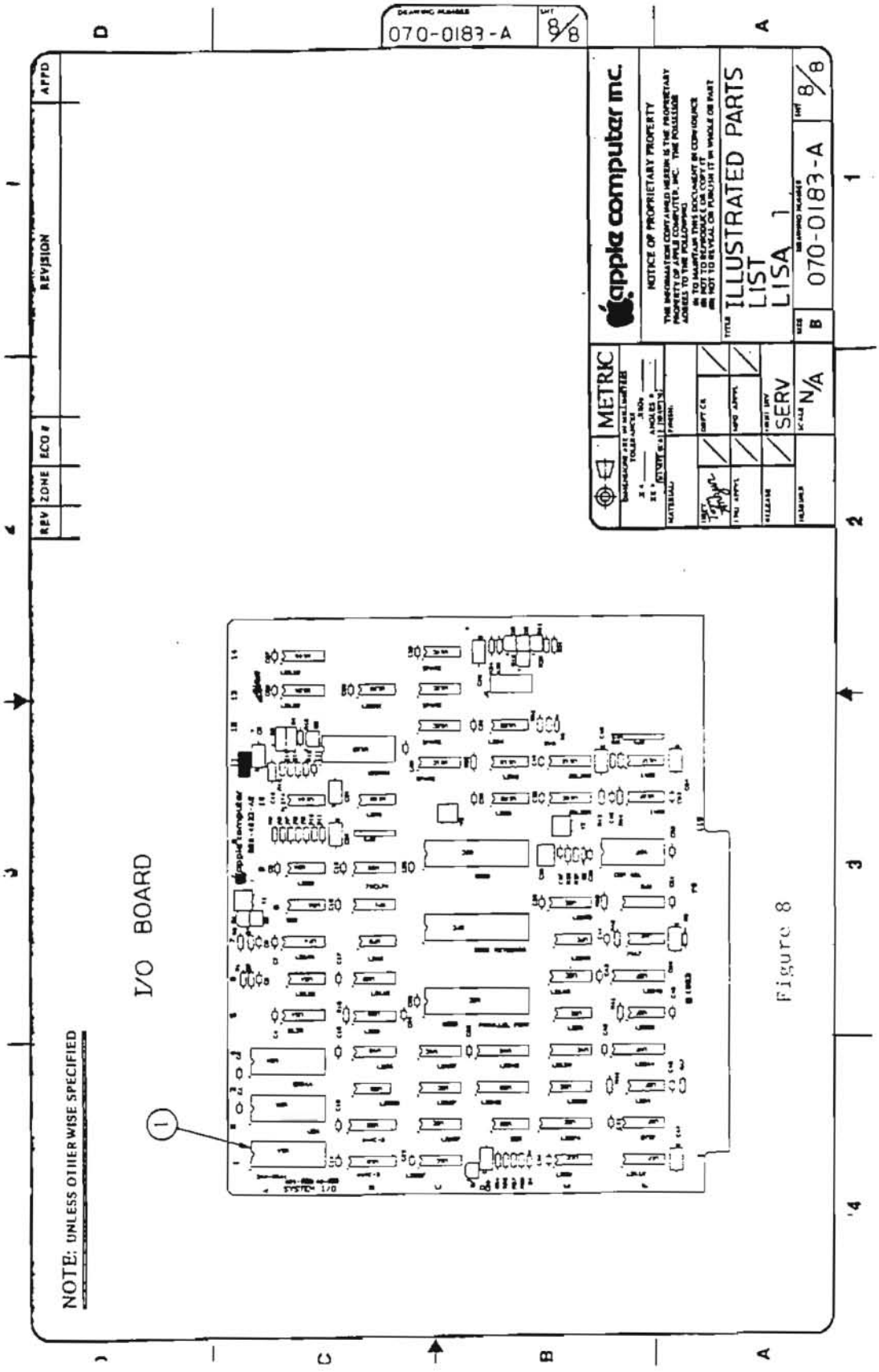
070-0183-A
8/8
apple computer inc.
NOTICE OF PROPRIETARY PROPERTY
THE INFORMATION CONTAINED HEREIN IS THE PROPRIETARY PROPERTY OF APPLE COMPUTER, INC. THE POSSESSOR AGREES TO THE FOLLOWING:
METRIC
TITLE ILLUSTRATED PARTS LIST LISA 1
SIZE B
070-0183-A
SERV
N/A
REVISION
REV
ZONE
ECO #
APPD
I/O BOARD
NOTE: UNLESS OTHERWISE SPECIFIED
1

Figure 8

LISA I/O BOARD (Figure 8)

Item	Part No.	Description
1	341-0138	Disk Controller ROM

apple computer

Lisa 2 Technical Procedures

Section 2

Illustrated Parts List

The figures and lists below include all piece parts that can be purchased separately from Apple for the Lisa 2, along with their part numbers. These are the only parts available from Apple. Refer to your Apple Service Programs manual for prices.

Contents:

Front Bezel..... 2.1
Top Assembly..... 2.3
Chassis 4..... 2.5
Video Assembly..... 2.7
Chassis 2..... 2.9
Chassis 1..... 2.11
Disk Drive Assembly..... 2.13
Card Cage..... 2.15
CPU Board..... 2.17
I/O Board..... 2.19

REV	ZONE	ECO #	REVISION	APPD
A		S493	INITIAL RELEASE	

NOTE: UNLESS OTHERWISE SPECIFIED

1 MANUAL REFERENCE : 072-0085

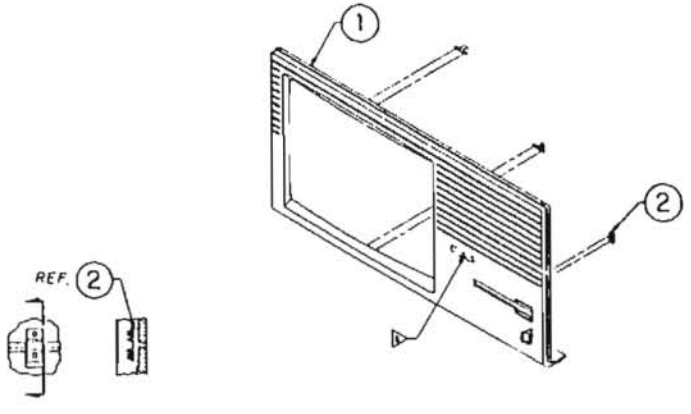

Figure 1

METRIC

apple computer inc.

NOTICE OF PROPRIETARY PROPERTY

THE INFORMATION CONTAINED HEREIN IS THE PROPRIETARY PROPERTY OF APPLE COMPUTER, INC. THE POSSESSOR AGREES TO THE FOLLOWING:

(a) TO MAINTAIN THIS DOCUMENT IN CONFIDENCE

(b) NOT TO REPRODUCE THE COPY IT

(c) NOT TO REVEAL OR PUBLISH IT IN WHOLE OR PART

TITLE: ILLUSTRATED PARTS LIST LISA 2/MAC XL

SIZE	DRAWING NUMBER	SHT
B	070-0200-A	1/11

070-0200-A 1/11

SERV

N/A

apple computer

LISA 2 FRONT BEZEL (Figure 1)

Item	Part No.	Description
1	620-5136	Lisa 2.0/Macintosh XL Bezel Subassembly
2	815-4120	Lens, Bezel LED

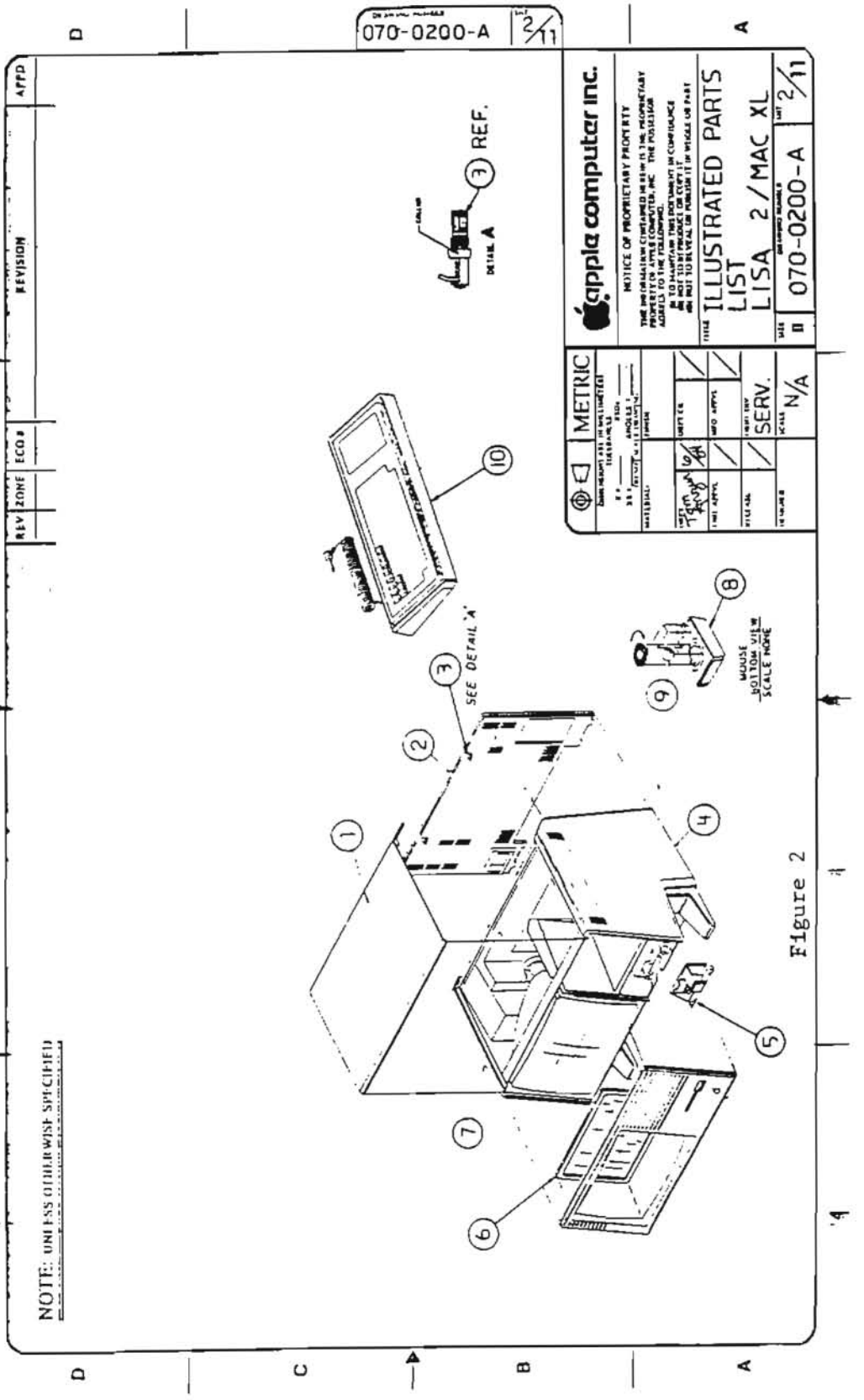
070-0200-A
2/11
REV
ZONE
ECO #
REVISION
APPD
METRIC
apple computer inc.
NOTICE OF PROPRIETARY PROPERTY
ILLUSTRATED PARTS LIST
LISA 2/MAC XL
070-0200-A
2/11
SERV.
N/A
NOTE: UNLESS OTHERWISE SPECIFIED
REF.
DETAIL A
SEE DETAIL 'A'
MOUSE
BOTTOM VIEW
SCALE NONE
1
2
3
4
5
6
7
8
9
10

Figure 2

apple computer

LISA 2 TOP ASSEMBLY (Figure 2)

Item	Part No.	Description
1	815-4075	Top Cover Plastic
2	620-5105	SubAssembly, Back Lisa
3	830-0051	Fastener, 1/4 Turn
4	815-4073	Right Side Plastic
5	076-0104	Lisa/Macintosh XL Soft Switch Assembly
6	620-6112	Glare Screen Assembly
7	815-4074	Left Side Plastic
8	661-93111	Lisa 1.0/2.0 Mouse
9	699-8001	Rubber Coated Mouse Ball
10	661-93109	Lisa/Macintosh XL Keyboard

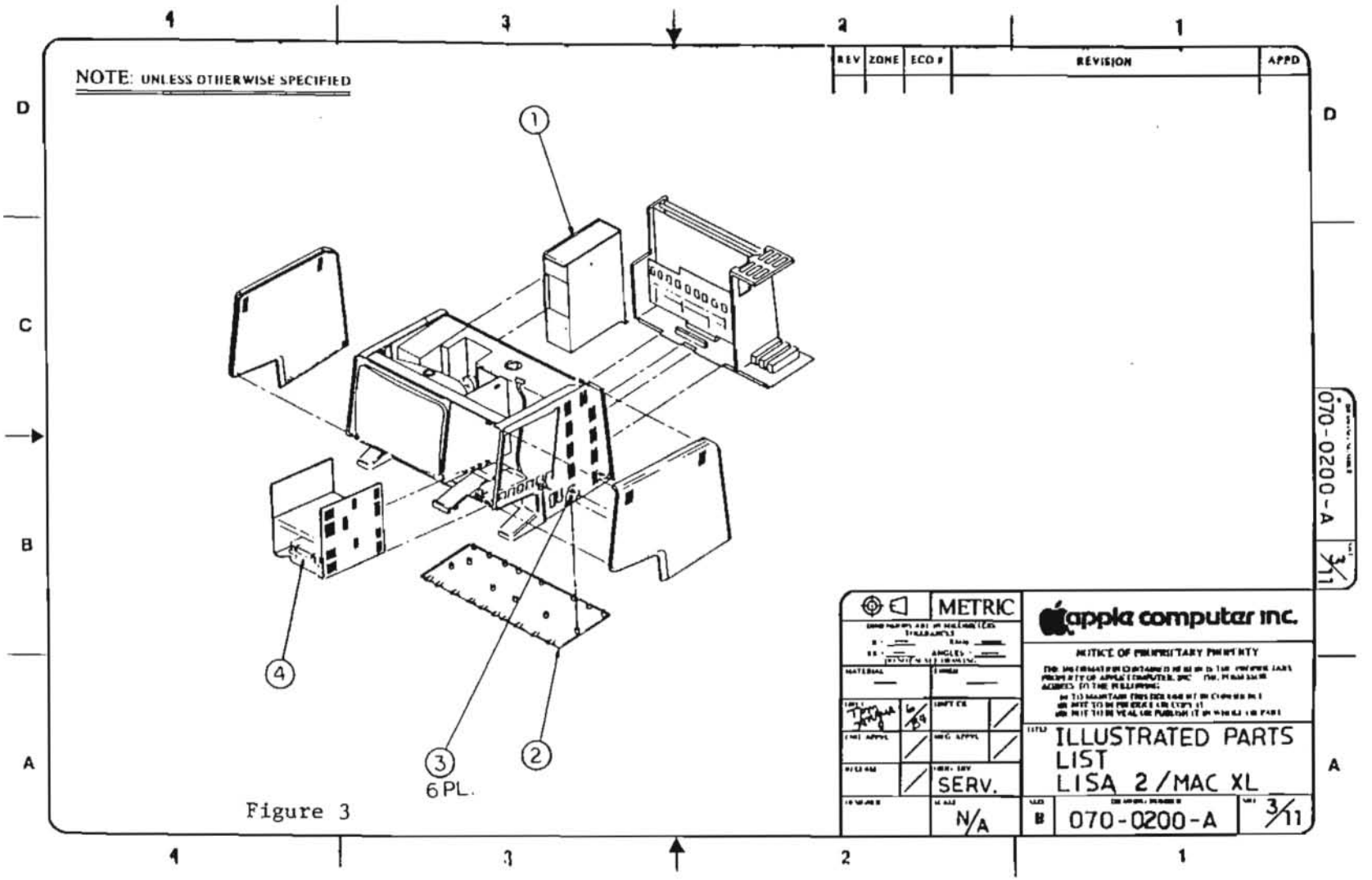
NOTE: UNLESS OTHERWISE SPECIFIED
REV
ZONE
ECO #
REVISION
APPD
1
2
3
4
6 PL.
METRIC
apple computer inc.
NOTICE OF PROPRIETARY PROPERTY
ILLUSTRATED PARTS LIST
LISA 2/MAC XL
SERV.
N/A
B
070-0200-A
3/11

Figure 3

apple computer

LISA 2 CHASSIS 4 (Figure 3)

Item	Part No.	Description
1	661-93108	Lisa 1.0/2.0 Power Supply
2	815-4090	Bottom Pan
3	430-3001	Screw Tap 6-20x0.375, Bottom Pan
4	661-76156	Micro Disk Mech Assembly

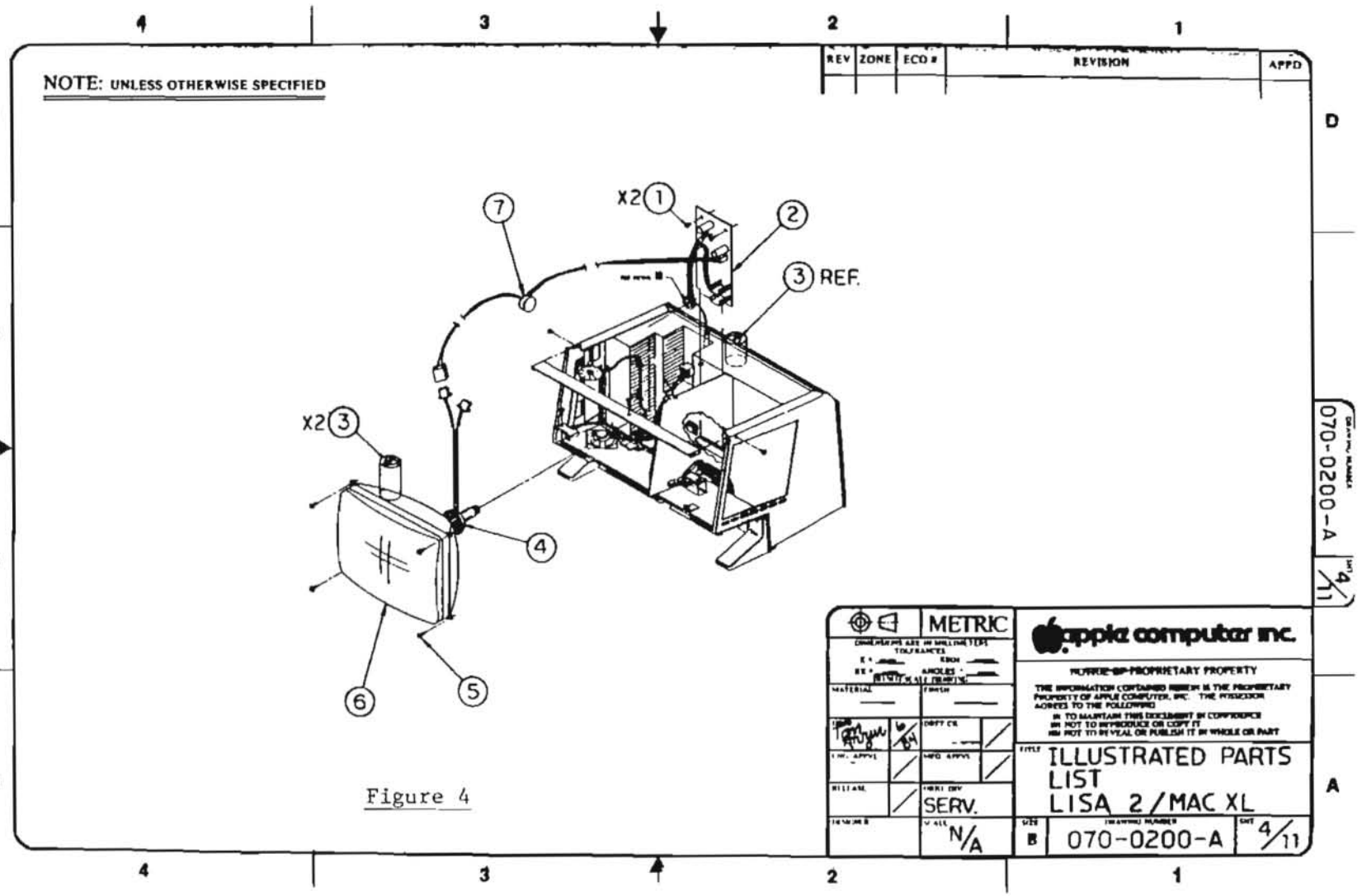
NOTE: UNLESS OTHERWISE SPECIFIED
REV
ZONE
ECO #
REVISION
APPD
X2 1
2
3 REF.
7
X2 3
4
5
6
METRIC
apple computer inc.
NOTICE OF PROPRIETARY PROPERTY
THE INFORMATION CONTAINED HEREIN IS THE PROPRIETARY PROPERTY OF APPLE COMPUTER, INC. THE POSSESSOR AGREES TO THE FOLLOWING:
TO MAINTAIN THIS DOCUMENT IN CONFIDENCE
NOT TO REPRODUCE OR COPY IT
NOT TO REVEAL OR PUBLISH IT IN WHOLE OR PART
MATERIAL
FINISH
SERV.
N/A
TITLE
ILLUSTRATED PARTS LIST
LISA 2/MAC XL
SIZE
B
070-0200-A
SHT
4/11
070-0200-A
4/11

Figure 4

apple computer

LISA 2 VIDEO ASSEMBLY (Figure 4)

Item	Part No.	Description
1	400-1603	Video Board Screw, 6-32x3/16
2	661-93107	Lisa/Macintosh XL Video Board
3	825-4002	Label, Danger
4	159-0015	Magnet, Yoke, Trim
	159-0020	Magnet, Yoke, Yellow
	159-0021	Magnet, Yoke, Red
	159-0022	Magnet, Yoke, Green
	159-0023	Magnet, Yoke, Blue
5	450-0020	Serrated Washer CRT 8-32x0.375
6	076-0105	Lisa/Macintosh XL CRT Yoke Assembly
7	699-0346	Transformer

NOTE: UNLESS OTHERWISE SPECIFIED

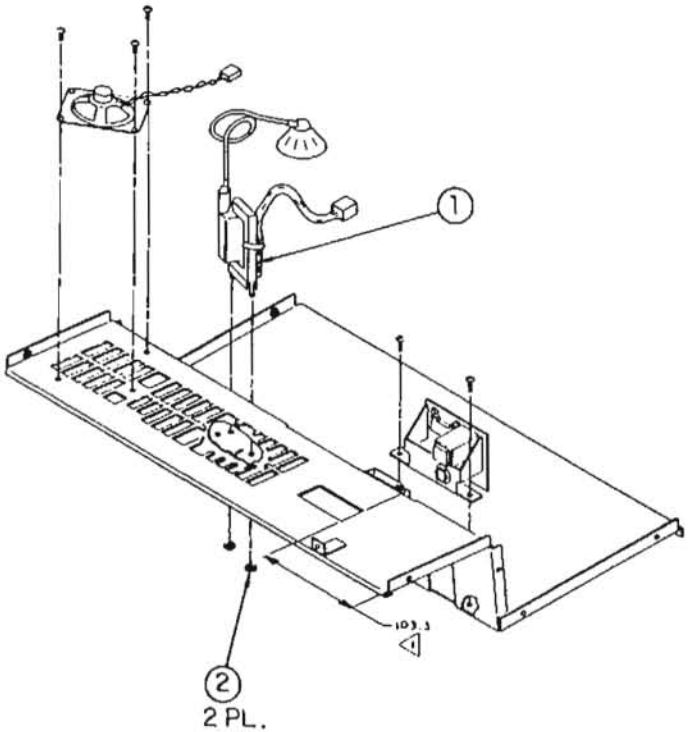

Figure 5

REV	ZONE	ECO #	REVISION	APPD

METRIC

apple computer inc.

NOTICE OF PROPRIETARY PROPERTY

ILLUSTRATED PARTS LIST
LISA 2/MAC XL

SERV

N/A

B 070-0200-A 5/11

070-0200-A 5/11

LISA 2 CHASSIS 2 (Figure 5)

Item	Part No.	Description
1	076-0106	Lisa/Macintosh XL Flyback Transformer
2	835-0181	Nut/Washer Assembly M3 0.5, Lisa/Macintosh XL Flyback

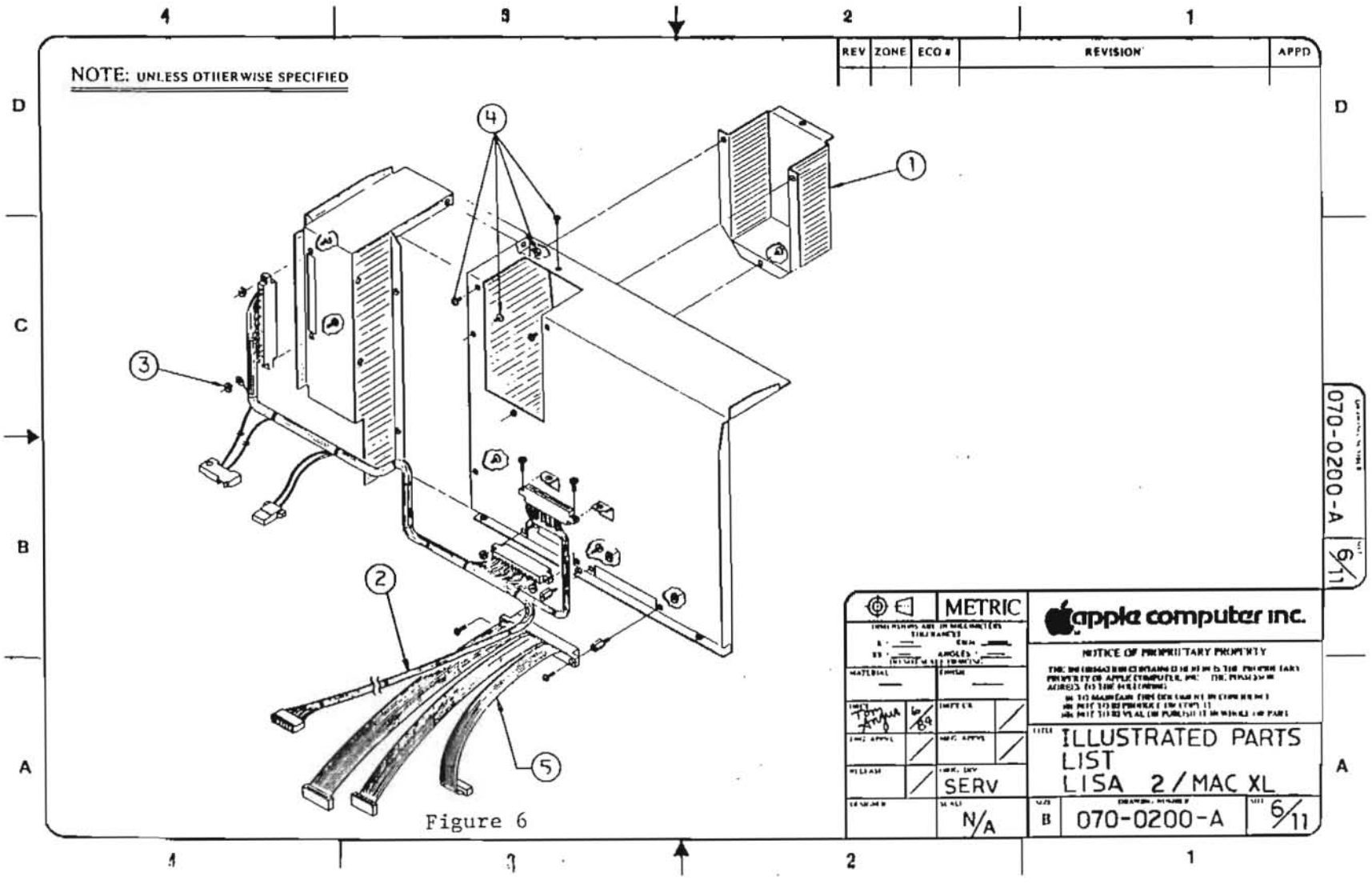
NOTE: UNLESS OTHERWISE SPECIFIED
REV
ZONE
ECO #
REVISION
APPD
METRIC
apple computer inc.
NOTICE OF PROPRIETARY PROPERTY
ILLUSTRATED PARTS LIST
LISA 2/MAC XL
SERV
N/A
B
070-0200-A
6/11
070-0200-A
6/11

Figure 6

LISA 2 CHASSIS 1 (Figure 6)

Item	Part No.	Description
1	805-4008	CRT Cup
2	591-0020	Power Cable, 2.0/Macintosh XL
3	835-0159	Nut, Washer Assembly Card Cage Chamber
4	400-1603	Video Board Screw, 6-32x3/16
5	591-0002	Drive Cable, 1.0/2.0

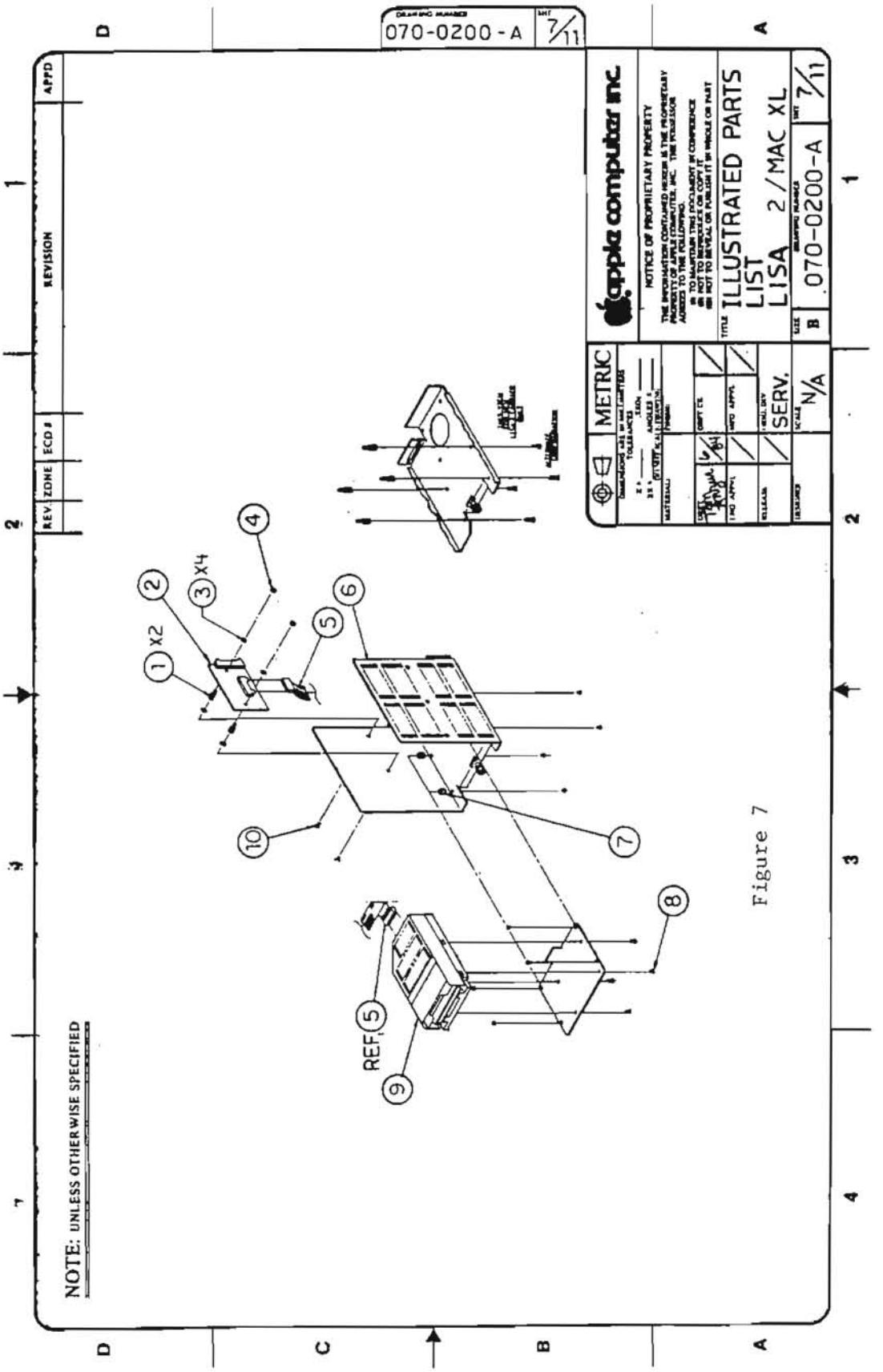
070-0200-A
7/11
apple computer inc.
NOTICE OF PROPRIETARY PROPERTY
METRIC
ILLUSTRATED PARTS LIST
LISA 2/MAC XL
070-0200-A
7/11
NOTE: UNLESS OTHERWISE SPECIFIED
REF
X2
X4

Figure 7

LISA 2 DISK DRIVE ASSEMBLY (Figure 7)

Item	Part No.	Description
1	860-0210	Micro Disk Adapter Standoff
2	661-93194	Drive Adapter Card
3	860-0251	Washer, Internal Tooth #6
4	835-0116	Nut, Hex Size 6, Microdisk Adapter PCB
5	590-0086	Micro Disk Adapter Cable
6	805-4052	Micro Disk Drive Carrier
7	860-0009	Micro Disk Drive Standoff
8	410-1306	Micro Disk Drive Screw M3x0.5x6mm
9	661-76156	Micro Disk Mechanical Assembly
10	400-3604	Disk Drive Screw, 6-32x1/4

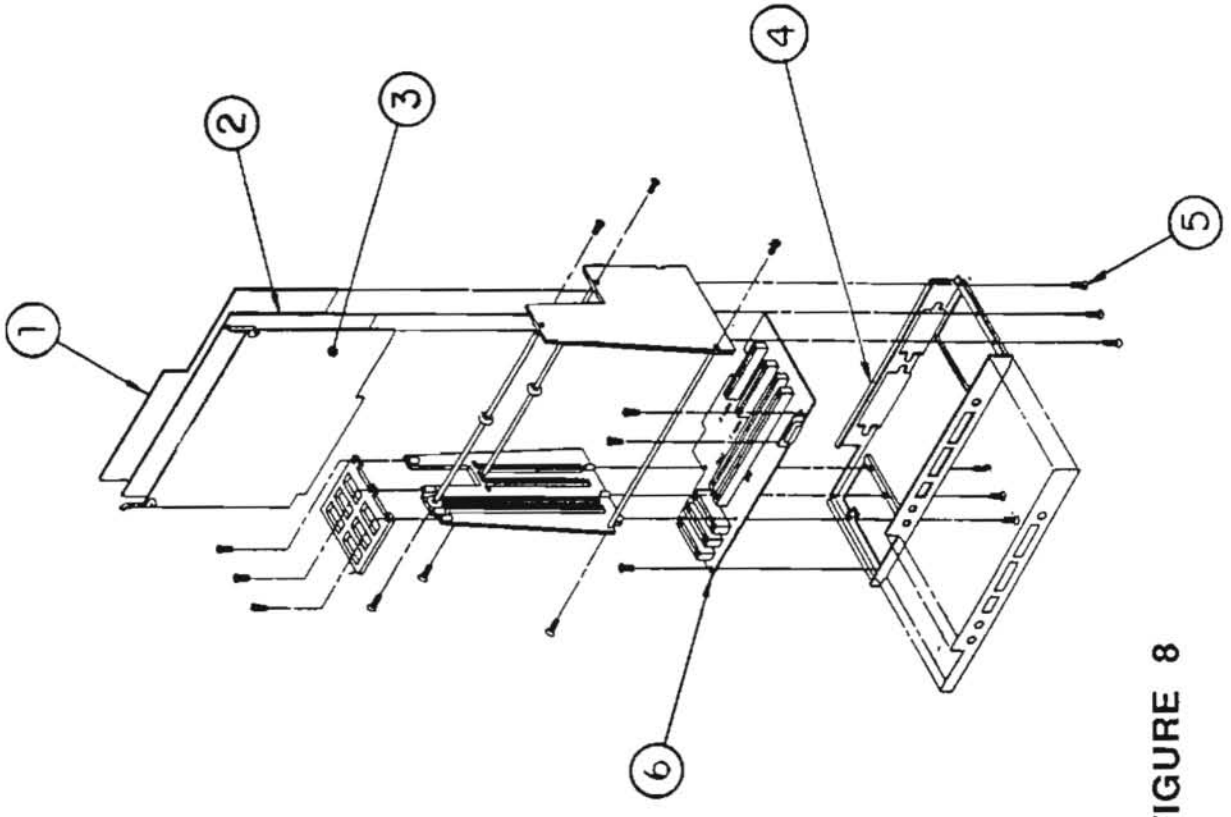

FIGURE 8

LISA 2 CARD CAGE (Figure 8)

Item	Part No.	Description
1	661-93105	Lisa/Macintosh XL Memory Board
2	661-93103	Lisa/Macintosh XL CPU Card
3	661-93198	Lisa 2.0 I/O Board
4	805-4046	Lisa 1.0/2.0 Card Cage Chassis
5	400-1405	Card Cage Screw, 4-40 x 5/16
6	661-93106	Lisa 1.0/2.0 Motherboard

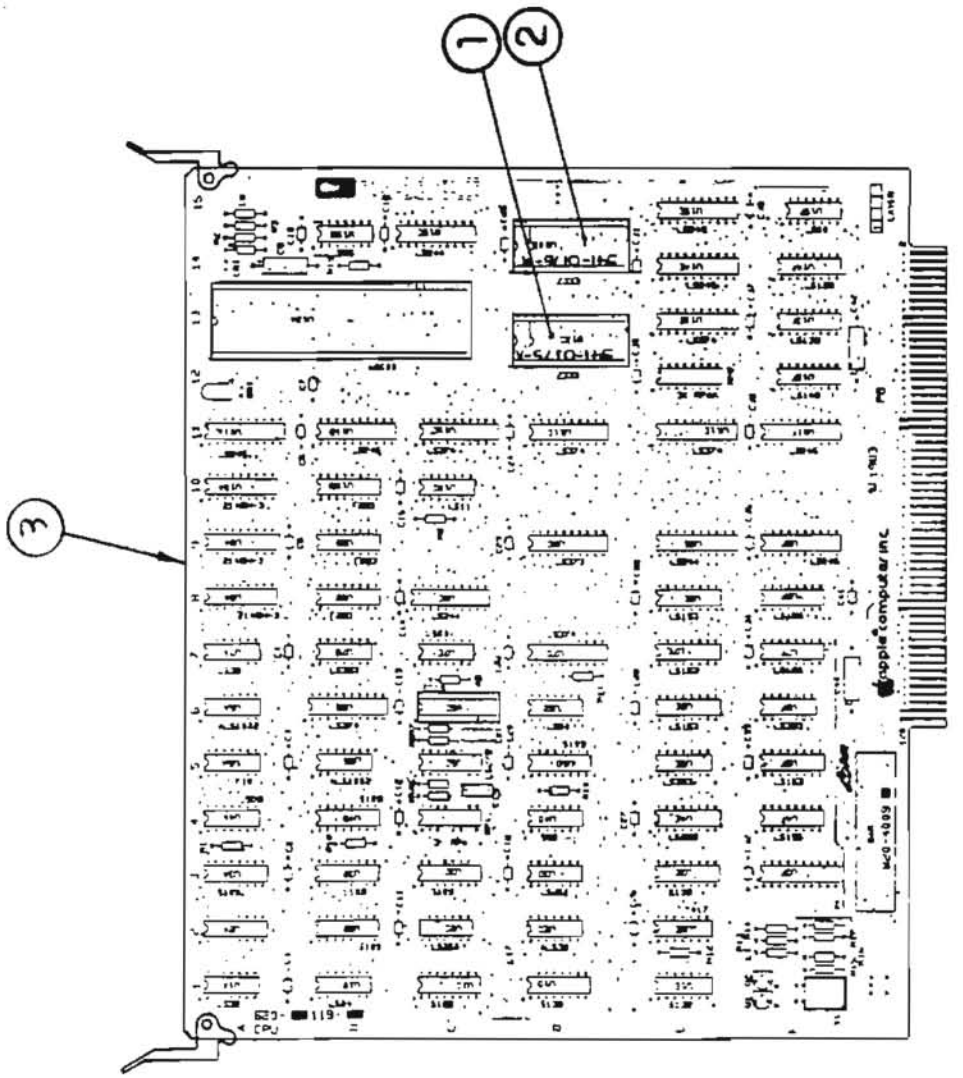

FIGURE 9

LISA/MACINTOSH XL CPU BOARD (Figure 9)

Item	Part No.	Description
1	341-0175	Boot ROM, High 64K
2	341-0176	Boot ROM, Low 64K
3	661-93103	Lisa/Macintosh XL CPU Card

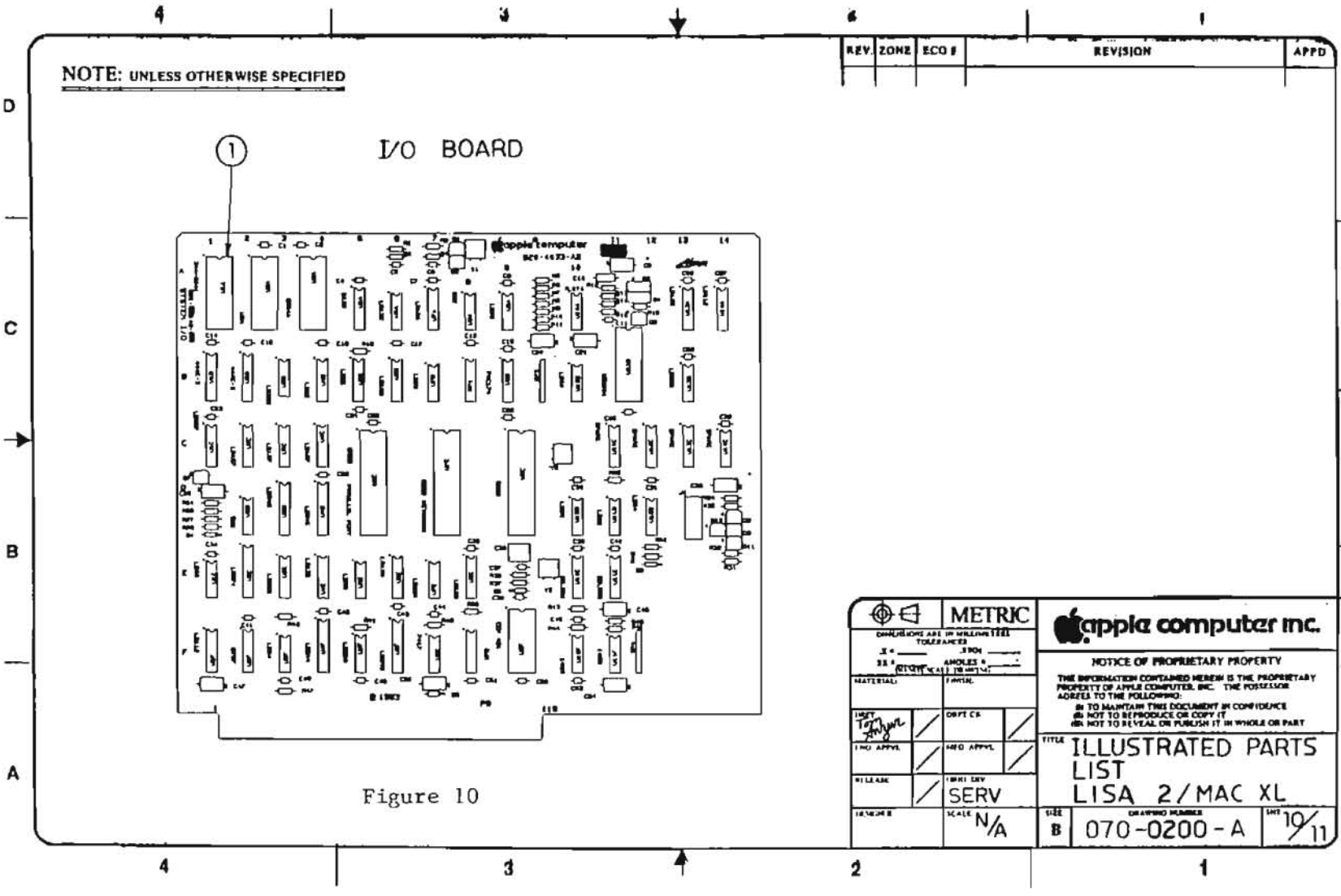
NOTE: UNLESS OTHERWISE SPECIFIED
REV. ZONE ECO # REVISION APPD
1
I/O BOARD
METRIC
apple computer inc.
NOTICE OF PROPRIETARY PROPERTY
THE INFORMATION CONTAINED HEREIN IS THE PROPRIETARY PROPERTY OF APPLE COMPUTER, INC. THE POSSESSOR AGREES TO THE FOLLOWING:
(a) TO MAINTAIN THIS DOCUMENT IN CONFIDENCE
(b) NOT TO REPRODUCE OR COPY IT
(c) NOT TO REVEAL OR PUBLISH IT IN WHOLE OR PART
TITLE ILLUSTRATED PARTS LIST
LISA 2/MAC XL
SERV
N/A
SIZE B
070-0200-A
10/11
070 0200 A
10/11

Figure 10

LISA 2 I/O BOARD (Figure 10)

Item	Part No.	Description
1	341-0290	Disk Controller ROM, Lisa 2

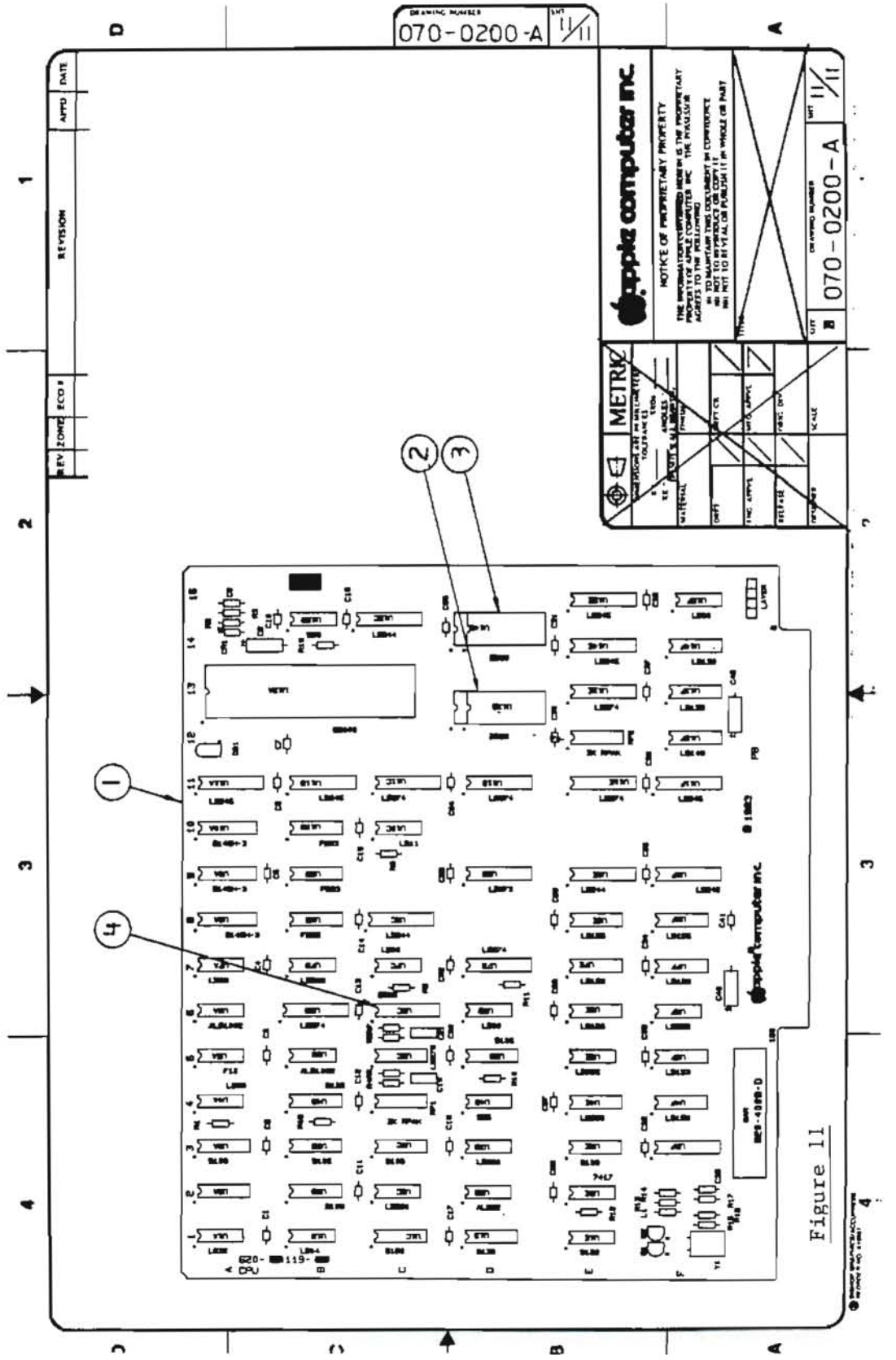
070-0200-A
apple computer inc.
NOTICE OF PROPRIETARY PROPERTY
METRIC
070-0200-A
1
2
3
4

Figure 11

LISA 2 - MODIFIED CPU CARD (Figure 11)

Item	Part No.	Description
1	661-0298	Macintosh XL Modified CPU Card
2	341-0347	Boot ROM, High
3	341-0346	Boot ROM, Low
4	341-0348	Video ROM

apple computer

Macintosh XL Technical Procedures

Section 3

Illustrated Parts List

The figures and lists below include all piece parts that can be purchased separately from Apple for the Macintosh XL, along with their part numbers. These are the only parts available from Apple. Refer to your Apple Service Programs manual for prices.

Contents:

Front Bezel..... 3.1
Top Assembly..... 3.3
Chassis 4..... 3.5
Video Assembly..... 3.7
Chassis 2..... 3.9
Chassis 1..... 3.11
Disk Drive Assembly..... 3.13
Card Cage..... 3.15
CPU Board..... 3.17
I/O Board..... 3.19

apple computer

REV	ZONE	ECO #	REVISION	APPD
A		5493	INITIAL RELEASE	

NOTE: UNLESS OTHERWISE SPECIFIED

1). MANUAL REFERENCE : 072-0085

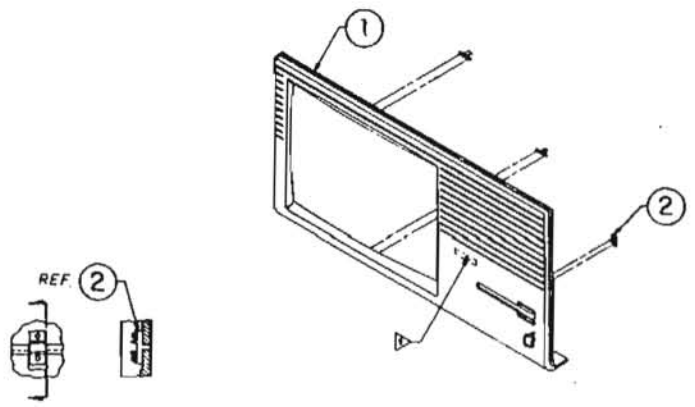

Figure 1

DRAWING NUMBER 070-0201-A SHT 1/11

METRIC

DIMENSIONS ARE IN MILLIMETERS
TOLERANCES
X ± ___ XXX ___
XX ± ___ ANGLES ___
DESIGN SCALE DRAWING

MATERIAL ___ FINISH ___

DRFT Tom Angus 6/89 DRFT CK ___

ENG APPVL ___ MFG APPVL ___

RELEASE ___ ORIG DIV SERV

DESIGNER ___ SCALE N/A

apple computer inc.

NOTICE OF PROPRIETARY PROPERTY

THE INFORMATION CONTAINED HEREIN IS THE PROPRIETARY PROPERTY OF APPLE COMPUTER, INC. THE POSSESSOR AGREES TO THE FOLLOWING:
(i) TO MAINTAIN THIS DOCUMENT IN CONFIDENCE
(ii) NOT TO REPRODUCE OR COPY IT
(iii) NOT TO REVEAL OR PUBLISH IT IN WHOLE OR PART

TITLE ILLUSTRATED PARTS LIST LISA 2/10/MAC XL

SIZE B DRAWING NUMBER 070-0201-A SHT 1/11

apple computer

MACINTOSH XL FRONT BEZEL (Figure 1)

Item	Part No.	Description
1	620-5136	Lisa 2.0/Macintosh XL Bezel Subassembly
2	815-4120	Lens, Bezel LED

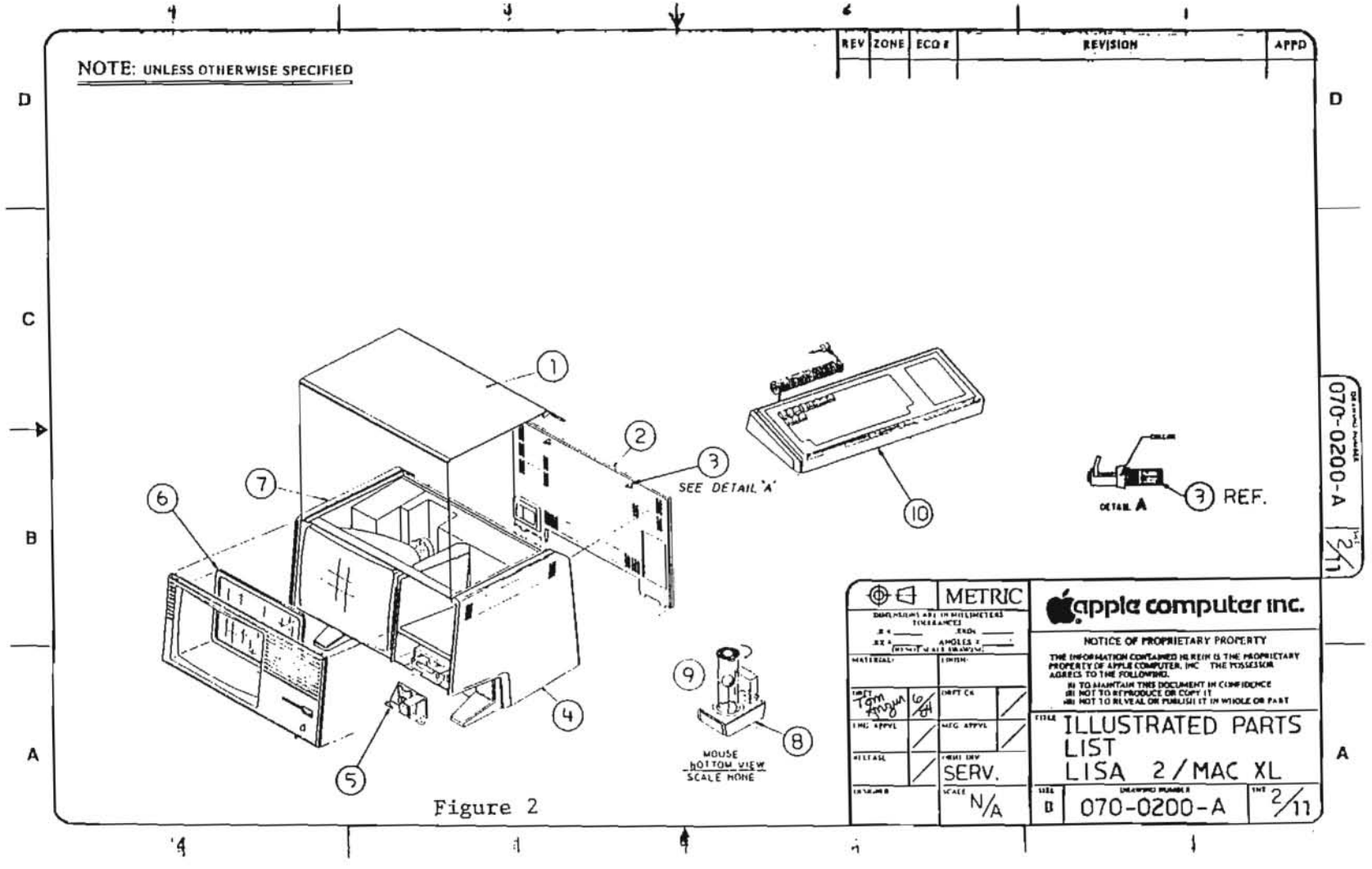
NOTE: UNLESS OTHERWISE SPECIFIED
REV
ZONE
ECO #
REVISION
APPD
SEE DETAIL 'A'
DETAIL A
REF.
MOUSE
BOTTOM VIEW
SCALE NONE
METRIC
apple computer inc.
NOTICE OF PROPRIETARY PROPERTY
THE INFORMATION CONTAINED HEREIN IS THE PROPRIETARY PROPERTY OF APPLE COMPUTER, INC. THE POSSESSOR AGREES TO THE FOLLOWING:
(1) TO MAINTAIN THIS DOCUMENT IN CONFIDENCE
(2) NOT TO REPRODUCE OR COPY IT
(3) NOT TO REVEAL OR PUBLISH IT IN WHOLE OR PART
TITLE
ILLUSTRATED PARTS LIST
LISA 2/MAC XL
SIZE
D
070-0200-A
SERV.
N/A
070-0200-A
2/11

Figure 2

apple computer

MACINTOSH XL TOP ASSEMBLY (Figure 2)

Item	Part No.	Description
1	815-4075	Top Cover Plastic
2	620-5105	SubAssembly, Back
3	830-0051	Fastener, 1/4 Turn
4	815-4073	Right Side Plastic
5	076-0104	Lisa/Macintosh XL Softswitch Assembly
6	620-6112	Glare Screen Assembly
7	815-4074	Left Side Plastic
8	661-96155	Macintosh Mouse
9	699-8001	Rubber Coated Mouse Ball
10	661-93109	Lisa/Macintosh XL Keyboard

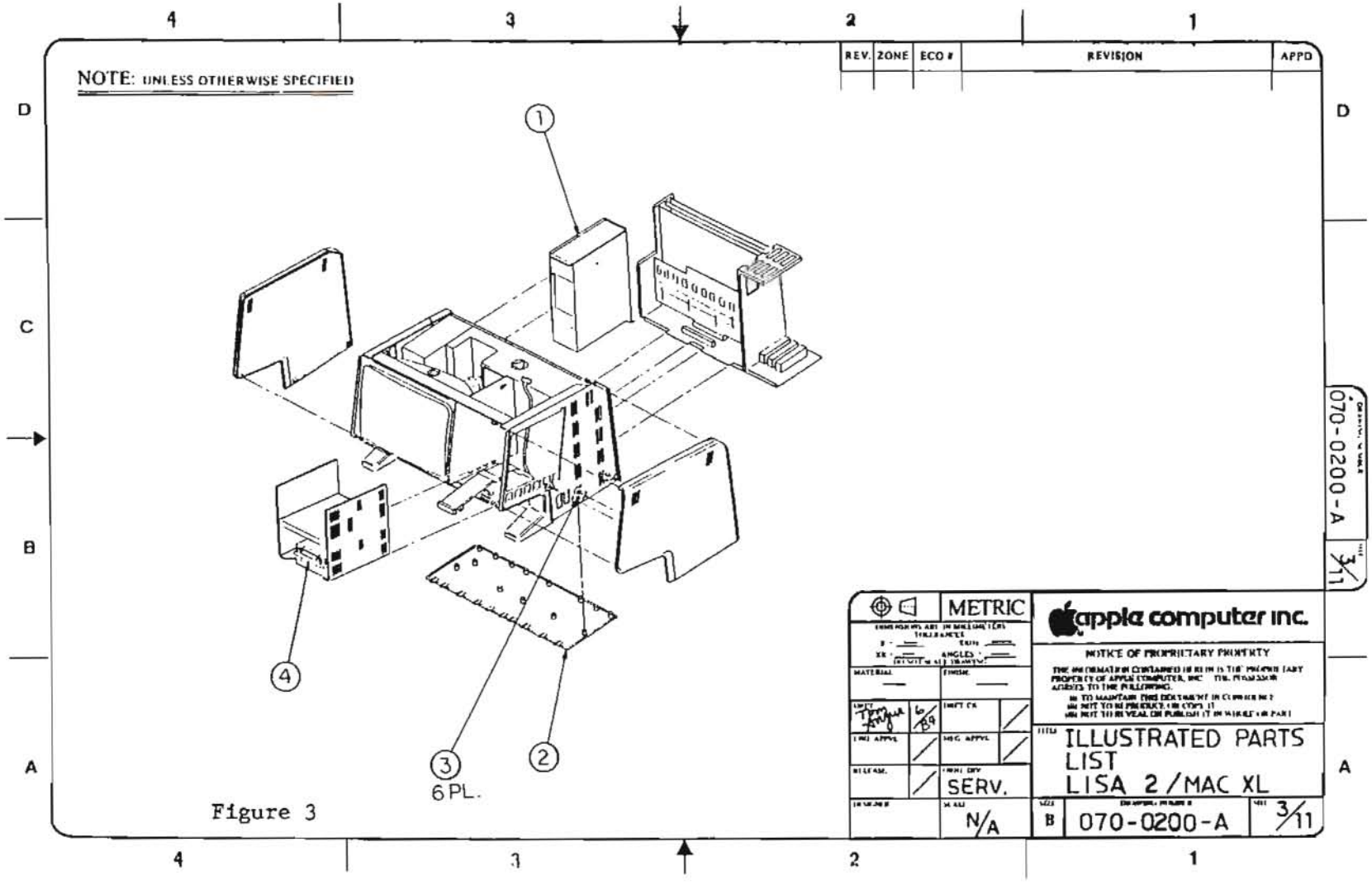
NOTE: UNLESS OTHERWISE SPECIFIED
REV. ZONE ECO # REVISION APPD
1
2
3
6 PL.
4
METRIC
apple computer inc.
NOTICE OF PROPRIETARY PROPERTY
ILLUSTRATED PARTS LIST
LISA 2 / MAC XL
SERV.
N/A
B
070-0200-A
3/11

Figure 3

apple computer

MACINTOSH XL CHASSIS 4 (Figure 3)

Item	Part No.	Description
1	661-73172	Macintosh XL Power Supply
2	815-4090	Bottom Pan
3	430-3001	Screw Tap 6-20x0.375, Bottom Pan
4	661-76156	Micro Disk Mech Assembly
5	661-93176	Macintosh XL Hard Disk Assembly

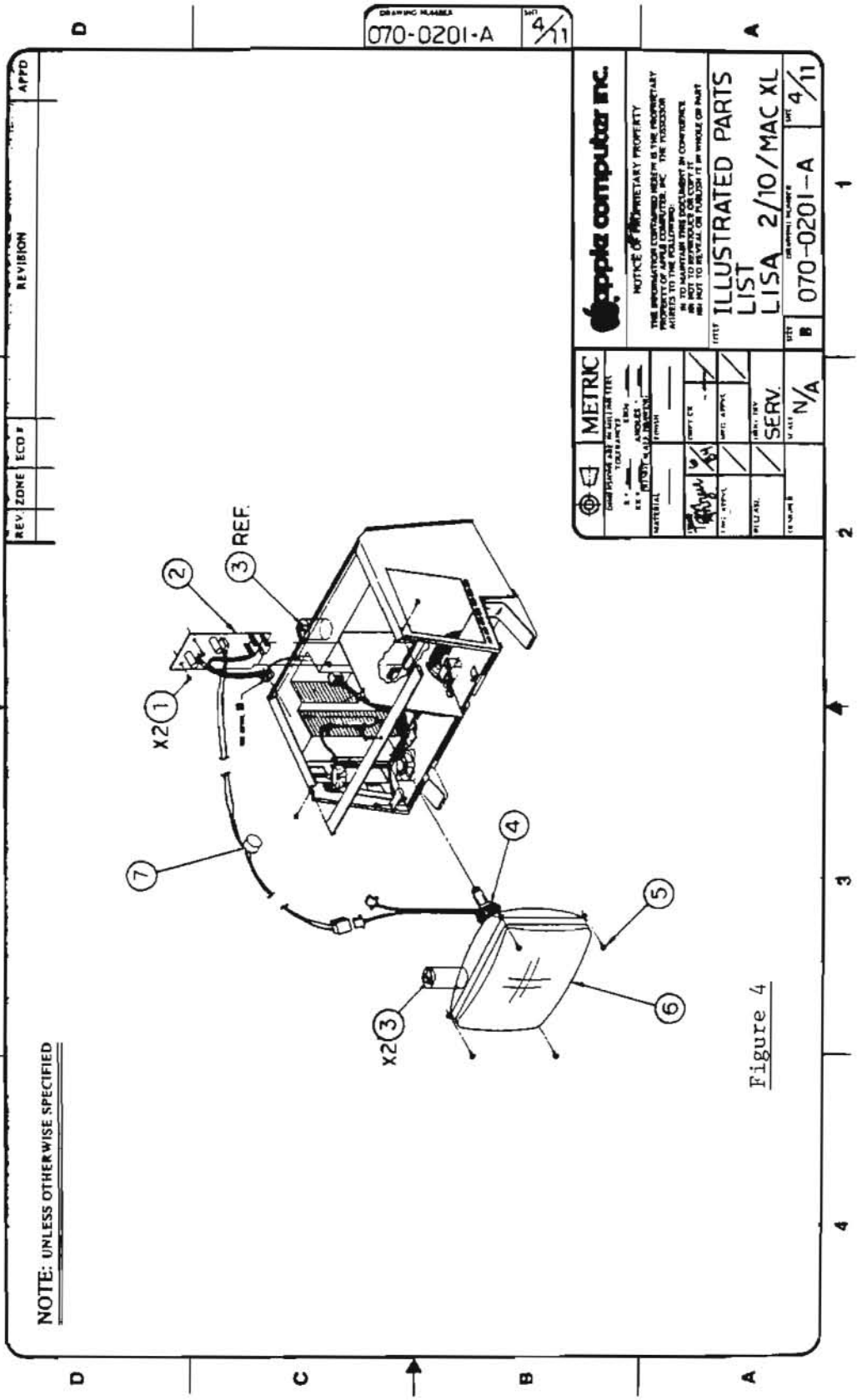
070-0201-A
4/11
REVISION
REV
ZONE
ECO #
APPD
METRIC
apple computer inc.
NOTICE OF PROPRIETARY PROPERTY
THE INFORMATION CONTAINED HEREIN IS THE PROPRIETARY PROPERTY OF APPLE COMPUTER, INC. AND SHALL NOT BE REPRODUCED OR TRANSFERRED TO OTHER DOCUMENTS OR DISCLOSED TO OTHERS OR USED FOR ANY PURPOSE EXCEPT AS SPECIFICALLY AUTHORIZED IN WRITING BY APPLE COMPUTER, INC. THE POSSESSOR AGREES TO THE FOLLOWING:
1) TO MAINTAIN THIS DOCUMENT IN CONFIDENCE
2) NOT TO REPRODUCE OR TRANSFER IT TO OTHERS
3) NOT TO REVEAL OR PUBLISH IT IN WHOLE OR PART
TITLE
ILLUSTRATED PARTS LIST
LISA 2/10/MAC XL
SIZE
B
070-0201-A
SHT 4/11
SERV.
N/A
REF.
X2
X2
NOTE: UNLESS OTHERWISE SPECIFIED

Figure 4

apple computer

MACINTOSH XL VIDEO ASSEMBLY (Figure 4)

Item	Part No.	Description
1	400-1603	Video Board Screw, 6-32x3/16
2	661-93107	Lisa/Macintosh XL Video Board
3	825-4002	Label, Danger
4	159-0015	Magnet, Yoke, Trim
	159-0020	Magnet, Yoke, Yellow
	159-0021	Magnet, Yoke, Red
	159-0022	Magnet, Yoke, Green
	159-0023	Magnet, Yoke, Blue
5	450-0020	Serrated Washer, CRT 8-32x0.375
6	076-0105	Lisa/Macintosh XL CRT Yoke Assembly
7	699-0346	Transformer

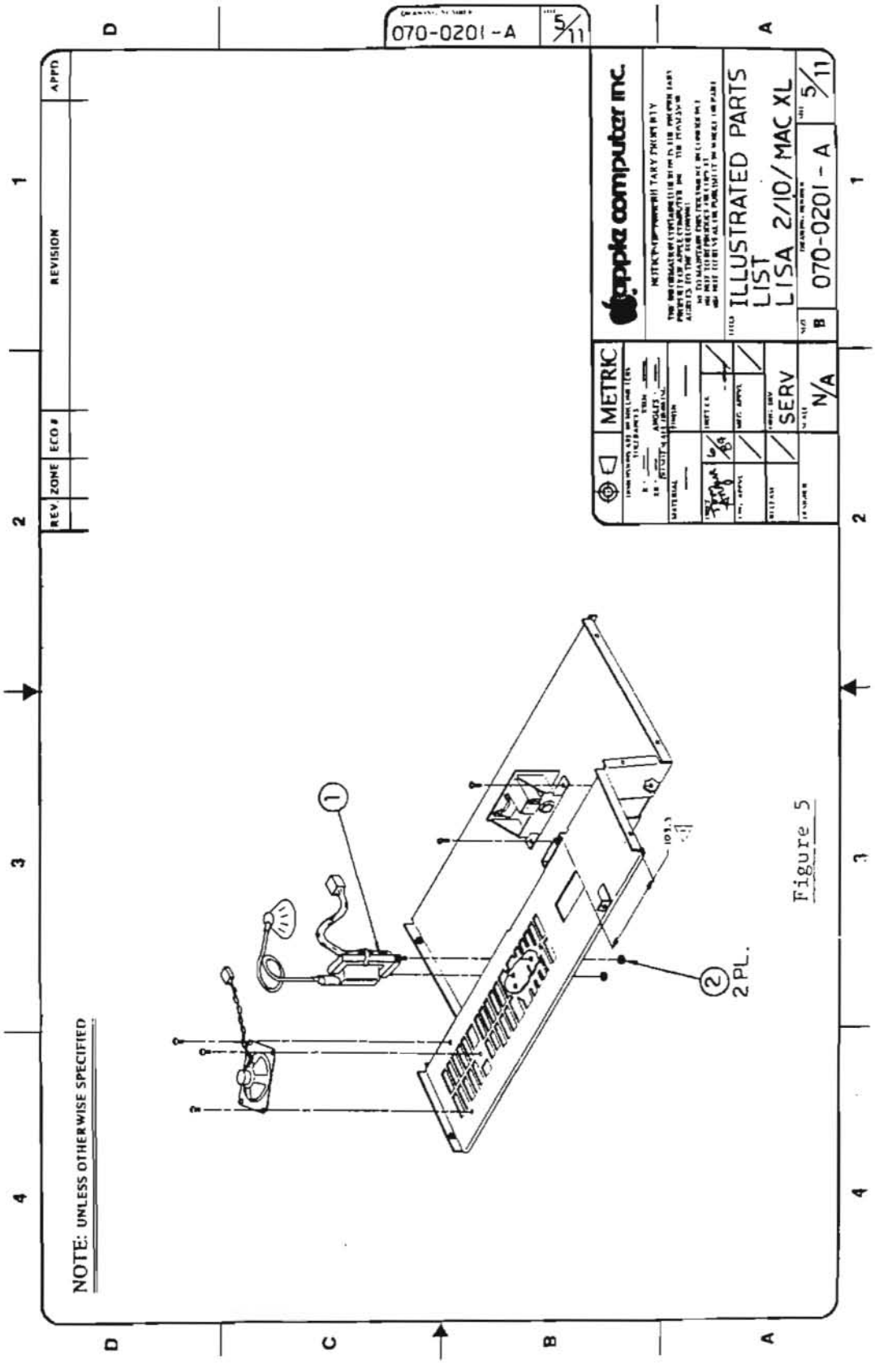
070-0201-A
5/11
METRIC
apple computer inc.
ILLUSTRATED PARTS LIST
LISA 2/10/MAC XL
070-0201 - A
B
5/11
N/A
SERV
REV
ZONE
ECO #
REVISION
APPD
NOTE: UNLESS OTHERWISE SPECIFIED
1
2
2PL.

Figure 5

MACINTOSH XL VIDEO ASSEMBLY (Figure 5)

Item	Part No.	Description
1	076-0106	Lisa/Macintosh XL Flyback Transformer
2	835-0181	Nut/Washer Assembly M3 0.5, Lisa/Macintosh XL Flyback

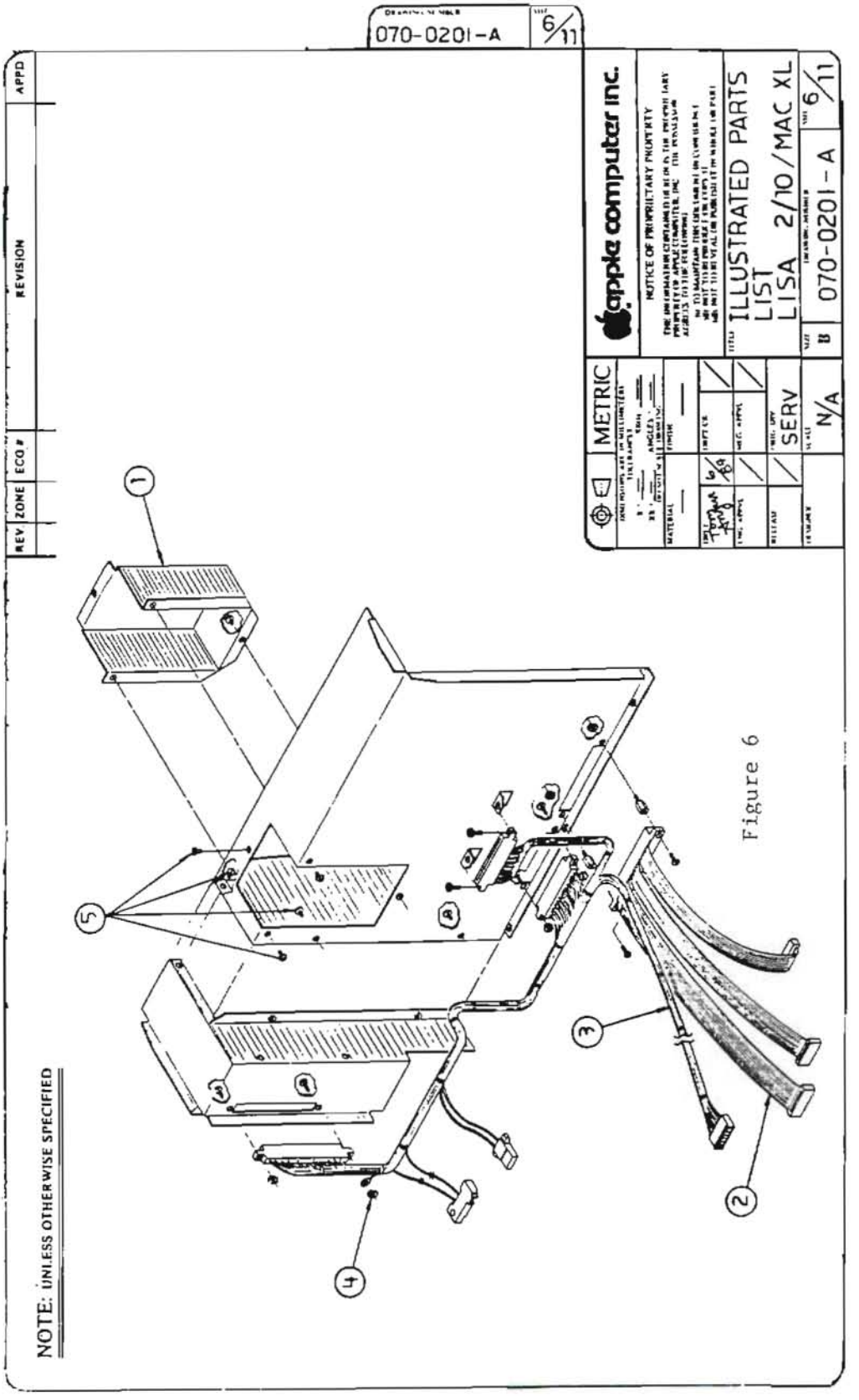
070-0201-A
6/11
REV
ZONE
ECO #
REVISION
APPD
apple computer inc.
METRIC
NOTICE OF PROPRIETARY PROPERTY
ILLUSTRATED PARTS LIST
LISA 2/10/MAC XL
070-0201-A
6/11
SERV
N/A
NOTE: UNLESS OTHERWISE SPECIFIED
1
2
3
4
5

Figure 6

MACINTOSH XL CHASSIS 1 (Figure 6)

Item	Part No.	Description
1	805-4008	CRT Cup
2	591-0014	Drive Cable, Macintosh XL
3	591-0020	Power Cable, 2.0/Macintosh XL
4	835-0150	Nut, Washer Assembly Card Cage Chamber
5	400-1603	Video Board Screw, 6-32x3/16

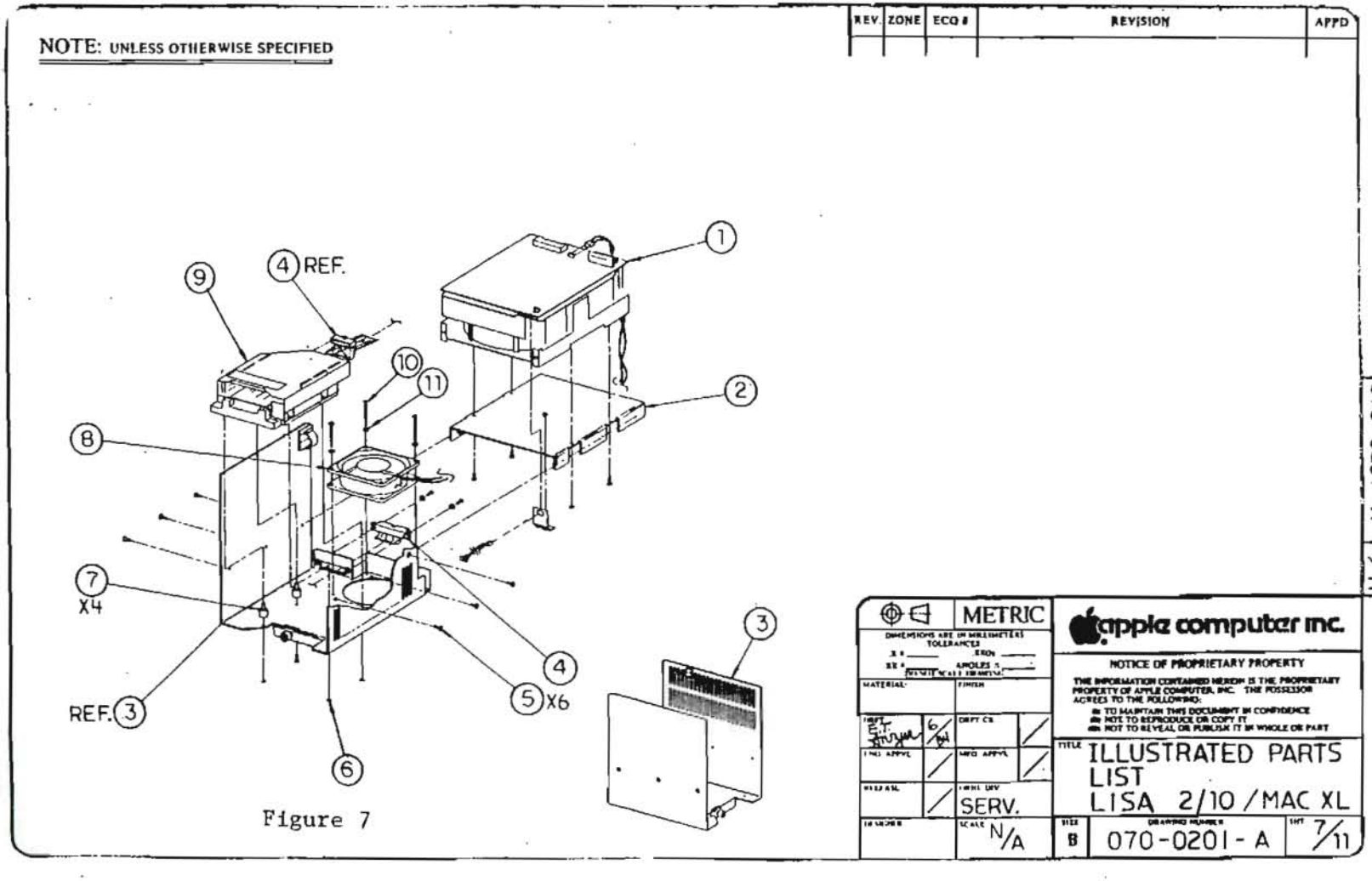
NOTE: UNLESS OTHERWISE SPECIFIED
REV. ZONE ECO # REVISION APPD
4 REF.
9
1
10
11
2
8
7
X4
REF. 3
5 X6
4
6
3
METRIC
DIMENSIONS ARE IN MILLIMETERS
TOLERANCES
MATERIAL
FINISH
SERV.
N/A
apple computer inc.
NOTICE OF PROPRIETARY PROPERTY
THE INFORMATION CONTAINED HEREIN IS THE PROPRIETARY PROPERTY OF APPLE COMPUTER, INC. THE POSSESSOR AGREES TO THE FOLLOWING:
TO MAINTAIN THIS DOCUMENT IN CONFIDENCE
NOT TO REPRODUCE OR COPY IT
NOT TO REVEAL OR PUBLISH IT IN WHOLE OR PART
TITLE ILLUSTRATED PARTS LIST
LISA 2/10 / MAC XL
SIZE B
070-0201 - A
SHT 7/11
070-0201 - A
7/11

Figure 7

MACINTOSH XL DISK DRIVE ASSEMBLY (Figure 7)

Item	Part No.	Description
1	661-93176	Macintosh XL Hard Disk Assembly
2	805-4054	Micro Disk Drive Carrier Shelf
3	805-4052	Micro Disk Drive Carrier
4	591-0017	Micro Disk Extender Cable
5	400-3604	Micro Disk Drive Screw, 6-32 x 1/4
6	410-2306	Micro Disk Carrier Bottom Screw, M3x5x6mm
7	860-0009	Micro Disk Standoff
8	600-0030	Macintosh XL Fan
9	661-76156	Micro Disk Assembly
10	406-1618	Fan Screw 6-32x1
11	860-0251	Fan, Internal Tooth #6

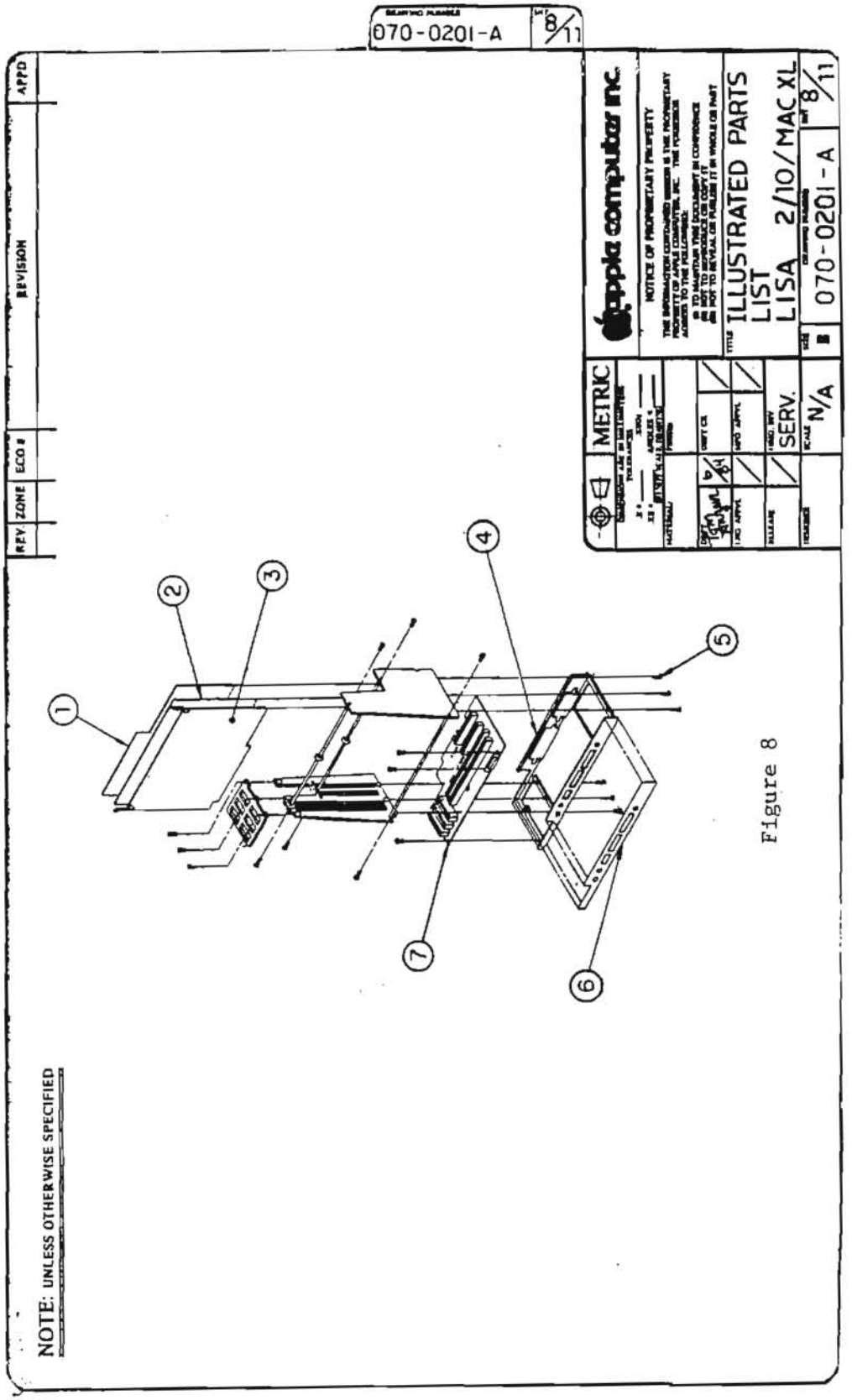
070-0201-A
8/11
REV
ZONE
ECO #
REVISION
APPD
apple computer inc.
METRIC
NOTICE OF PROPRIETARY PROPERTY
TITLE ILLUSTRATED PARTS LIST
LISA 2/10/MAC XL
070-0201-A
SIZE B
SCALE N/A
SERV.
NOTE: UNLESS OTHERWISE SPECIFIED
1
2
3
4
5
6
7

Figure 8

apple computer

MACINTOSH XL CARD CAGE (Figure 8)

Item	Part No.	Description
1	661-93105	Lisa/Macintosh XL Memory Board
2	661-93103	Lisa/Macintosh XL CPU Card
3	661-93171	Macintosh XL I/O Board
4	805-4051	Macintosh XL Card Cage Chassis
5	400-1405	Card Cage Screw, 4-40x5/16
6	825-4052	Label, Connector
7	661-93170	Macintosh XL Motherboard

NOTE: UNLESS OTHERWISE SPECIFIED

REV	ZONE	ECO #	REVISION	APPD

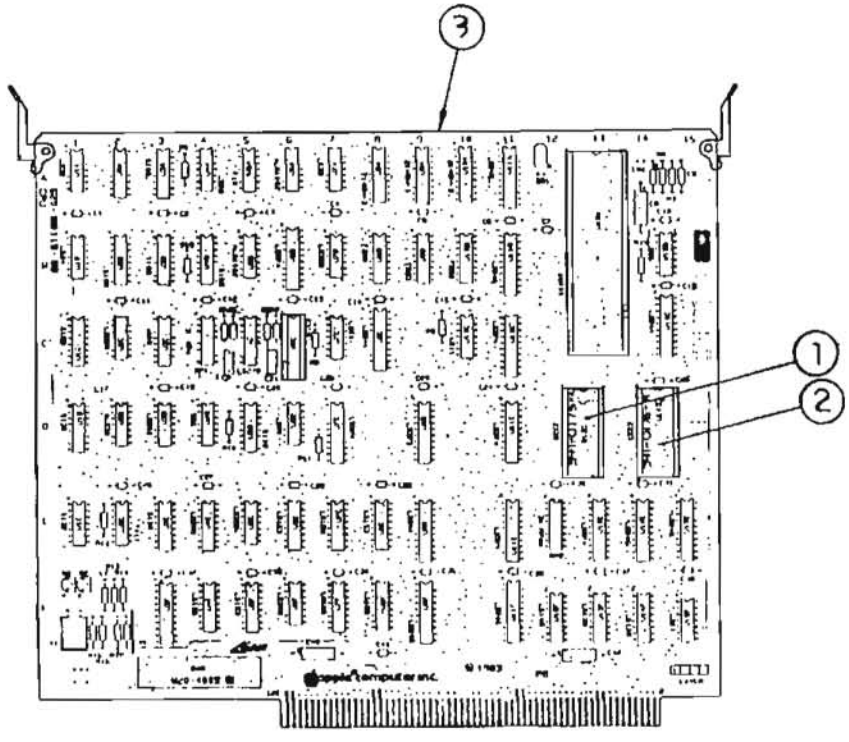

Figure 9 COMPONENT VIEW

070-0201-A 9/11

METRIC

SERV

N/A

apple computer inc.

PROPRIETARY PROPERTY
THE INFORMATION CONTAINED HEREIN IS THE PROPRIETARY PROPERTY OF APPLE COMPUTER, INC. AND THE POSSESSOR AGREES TO THE FOLLOWING:
(1) TO MAINTAIN THIS INFORMATION IN CONFIDENCE
(2) NOT TO COPY OR REPRODUCE THE CONTENTS IN ANY MANNER
(3) NOT TO USE THE INFORMATION IN WHOLE OR IN PART

TITLE: ILLUSTRATED PARTS LIST LISA 2/10/MAC XL

SIZE B | 070 - 0201 - A | 9/11

apple computer

LISA/MACINTOSH XL CPU BOARD (Figure 9)

Item	Part No.	Description
1	341-0175	Boot ROM, High 64K
2	341-0176	Boot ROM, Low 64K
3	661-93103	Lisa/Macintosh XL CPU Board

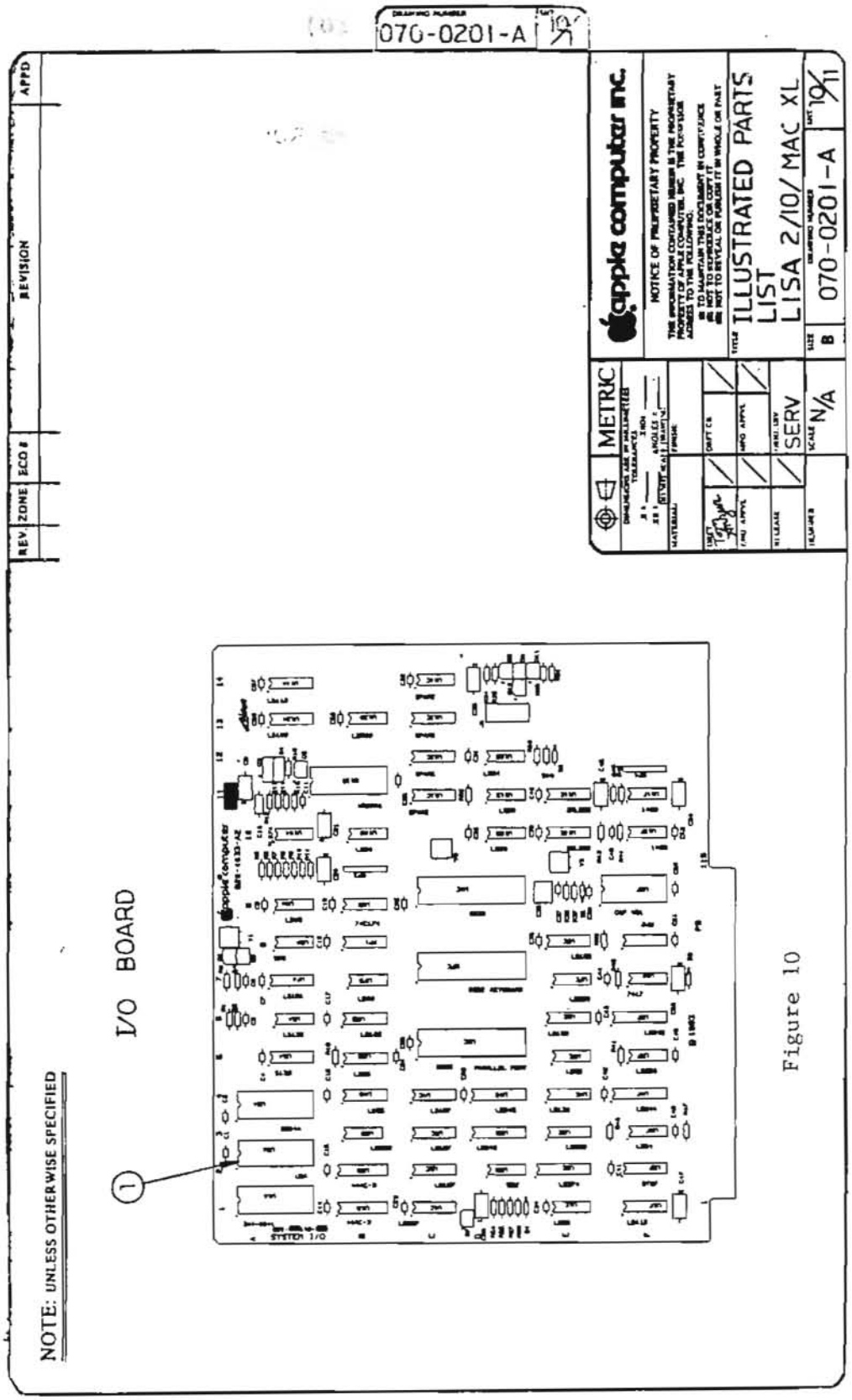
070-0201-A
REV.
ZONE
ECO #
REVISION
APPD
apple computer inc.
NOTICE OF PROPRIETARY PROPERTY
METRIC
TITLE
ILLUSTRATED PARTS LIST
LISA 2/10/MAC XL
SIZE
B
DRAWING NUMBER
070-0201-A
SCALE N/A
SERV
I/O BOARD
1
NOTE: UNLESS OTHERWISE SPECIFIED

Figure 10

LISA/MACINTOSH XL I/O BOARD (Figure 10)

Item	Part No.	Description
1	341-0281	Disk Controller ROM, Macintosh XL

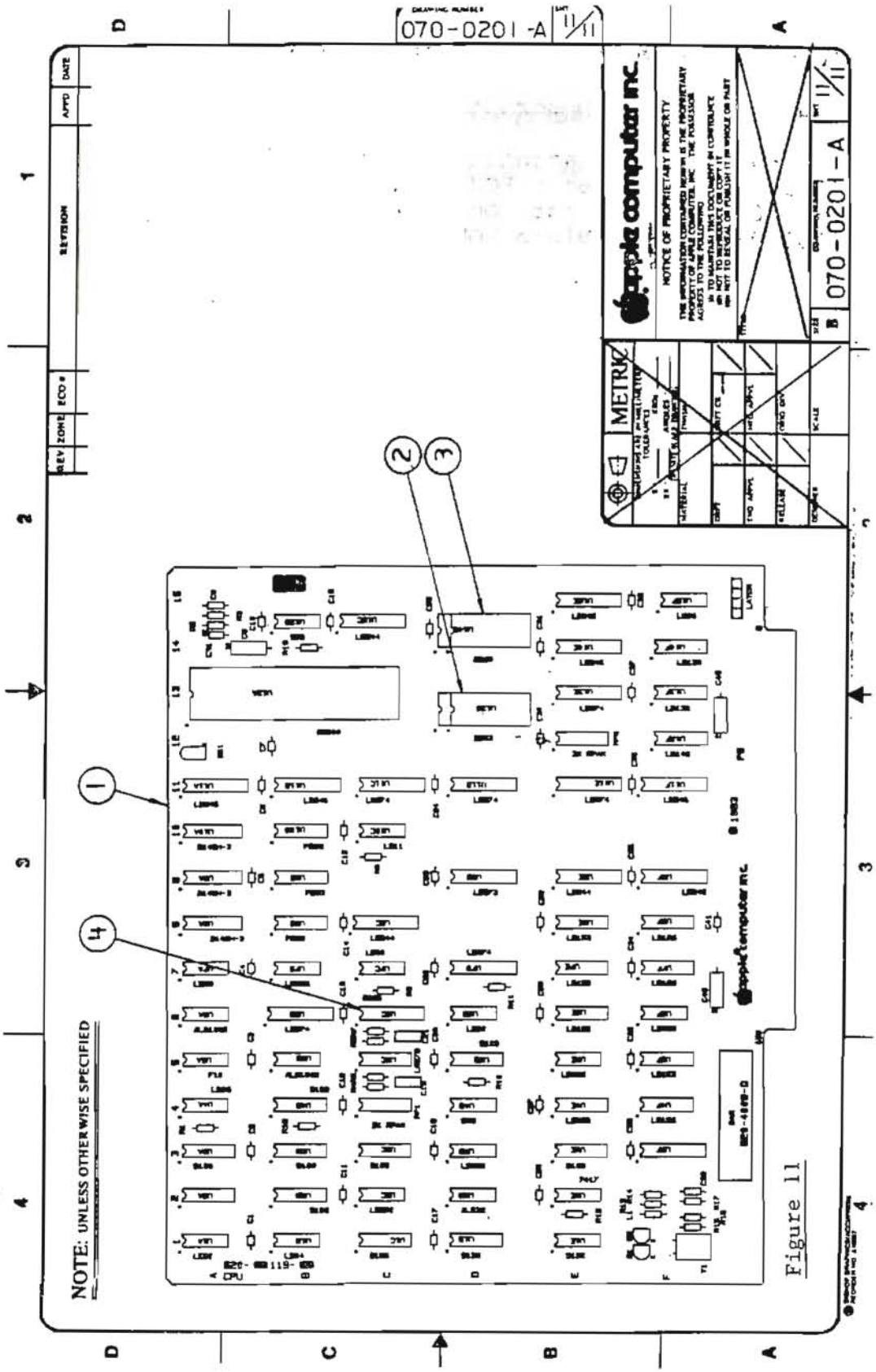
070-0201-A
apple computer inc.
070-0201-A
NOTE: UNLESS OTHERWISE SPECIFIED

Figure 11

LISA/MACINTOSH XL - MODIFIED CPU CARD (Figure 11)

Item	Part No.	Description
1	661-0298	Macintosh XL Modified CPU Card
2	341-0347	Boot ROM, High
3	341-0346	Boot ROM, Low
4	341-0348	Video ROM